DYNAPAC

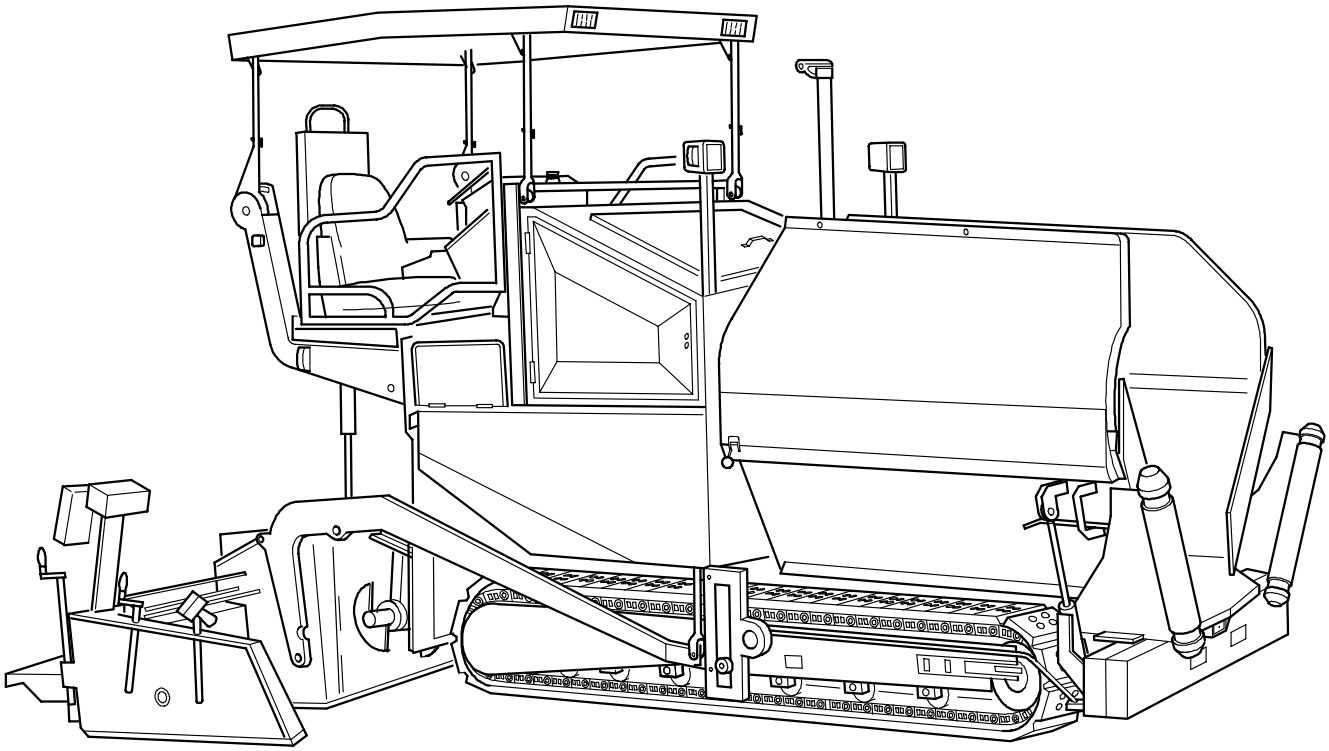

Paver Finisher
F 6 C

Operating instructions (GB)

01-0504

875.....

900 98 07 87

Preface

Safe operation of the machine requires specific knowledge that is imparted by these operating instructions. The information is provided in a concise, clearly structured form. The individual chapters are arranged in alphabetical order and every chapter starts with page 1. The individual pages are identified by the chapter letter and the page number.
Example: Page B 2 is the second page of chapter B.

These operating instructions cover various machine options. Make sure that during operation and maintenance work the description appropriate to the machine option is used.

Safety instructions and important notes are identified by the following pictograms:

STOP Precedes safety instructions that must be observed in order to prevent danger to personnel.

⚠ Precedes notes that must be observed to prevent damage to equipment.

☞ Precedes general notes and explanations.

● Used to indicate standard equipment.

○ Used to indicate optional equipment.

In the interest of continued development, the manufacturer reserves the right to make changes to the machine (which will not, however, change the essential features of the type of machine described) without updating these operating instructions at the same time.

Dynapac GmbH
Wardenburg

Ammerländer Strasse 93
D-26203 Wardenburg / Germany
Telephone: +49 / (0)4407 / 972-0
Fax: +49 / (0)4407 / 972-228
www.dynapac.com

Table of contents

A Correct use and application 1

B Vehicle description 1

1 Application 1
2 Description of assemblies and functions 2
2.1 Vehicle 3
Construction 3
3 Safety devices 6
3.1 Emergency stop button 6
3.2 Steering 6
3.3 Horn 6
3.4 Ignition key / lights 6
3.5 Safety devices on the gas heater system 6
3.6 Master switch 8
3.7 Hopper transport safeguard 8
3.8 Screed transport safeguard 8
3.9 Latch for protective roof (1) 9
3.10 Additional safety devices 10
3.11 Miscellaneous equipment 10
4 Technical data, standard configuration 11
4.1 Dimensions 11
4.2 Weights 12
4.3 Performance data 13
4.4 Traction drive/chassis 13
4.5 Engine 13
4.6 Hydraulic system 14
4.7 Material compartment (hopper) 14
4.8 Material conveying 14
4.9 Material distribution 15
4.10 Screed control system 15
4.11 Electrical system 16
4.12 Gas heating system for the screed (O) 16
5 Location of instruction labels and type plates 17
5.1 Identification label for the paver finisher (4) 19
5.2 Identification label for the liquefied gas system (12) 20
6 EN standards 21
6.1 Continuous sound pressure level 21
6.2 Operating conditions during measurement 21
6.3 Measuring point configuration 21
6.4 Vibration acting on the entire body 22
6.5 Vibrations acting on hands and arms 22
6.6 Electromagnetic compatibility (EMC) 22

C Transportation 1

1 Safety regulations for transportation 1
2 Transportation on low-bed trailers 2
2.1 Preparations 2
2.2 Driving onto the low-bed trailer 3
2.3 After transportation 3
3 Transportation on public roads 4
3.1 Preparations 4
3.2 Driving on public roads 5
4 Loading by crane 6
5 Towing 7
6 Safely parking the vehicle 8

D Operation 1

1 Safety regulations 1
2 Controls 2
2.1 Operating panel 2
2.2 Remote control 20
Front 20
Rear 21
2.3 Operating elements on the paver finisher 22
Engine speed adjuster (67) 22
Batteries (68) 23
Battery main switch (69) 23
Transport safeguards for the hopper (70) 23
Conveyor limit switch (paddle) (71) 24
Ultrasonic auger limit switch (72) 25
Sockets for working lights (left and right) (73) 25
Sockets for automatic levelling/slope (74) 26
Socket for remote control (75) 26
Vibration (76) and tamper (screed-specific) (77) speed control 27
Emulsion spray system (80), (81) 28
Collapsible roof lock (LH and RH on the rear console) (82): 28
Mechanical screed transport safeguard (left and right) (90) 29
Seat lock (behind the driver’s seat) (91) 30

3 Operation 31
3.1 Preparing for operation 31
Required devices and aids 31
Before starting work (in the morning or when starting paving) 31
Check list for the machine operator 32
3.2 Starting the paver finisher 33
Before starting the paver finisher 33
„Normal“ starting 33
External starting (starting aid) 34
After starting 35
Indicator lamps 36
Oil pressure indicator lamp for the diesel engine (1) 36
Battery charge indicator (2) 36
3.3 Preparations for paving 37
Separating agent 37
Screed heater system 37
Direction marks 37
Loading/distributing material 38
3.4 Driving off for laying 39
3.5 Checks during paving 41
Paver function 41
Quality of the layer 41
3.6 Paving with screed stop 42
General 42
Deactivation of floating position 42
3.7 Interrupting/terminating operation 43
During breaks (e.g. delays caused by material trucks) 43
During longer breaks (e.g. lunch break) 43
When work is finished 44
4 Malfunctions 46
4.1 Problems during paving 46
4.2 Paver finisher malfunctions 48

E Set-up and modification 1

1 Special notes on safety 1
2 Distribution auger 2
2.1 Height adjustment 2
2.2 Mechanical adjustment with ratchet 3
2.3 Hydraulic adjustment (o) 3
2.4 Auger extension 4
3 Screed 5
4 Electrical connections 5
4.1 Connect remote controls 5
4.2 Connect levelling system 5
4.3 Connect auger limit switches 6
4.4 Connect levelling device 6
4.5 Connect working lights 6

F Maintenance 1

1 Notes regarding safety 1
2 Maintenance intervals 2
2.1 Daily (or every 10 operating hours) 3
2.2 Weekly (or every 50 operating hours) 5
2.3 Every 500 operating hours 7
2.4 Annually (or every 1000 operating hours) 7
2.5 Every 2 years (or every 2000 operating hours) 9
3 Points for checking, lubricating and draining oil 10
3.1 Checkpoints 11
Planetary gear conveyor (1) 11
Batteries (2) 12
Air filter (dry air filter) (3) 12
Track tension of caterpillar drive (4) 13
Pump distributor gear (5) 14
High-pressure hydraulic filter (6) 14
Conveyor drive chains (8) 15
Outer auger bearing (9) 16
Auger box filling level (11) 17
Auger drive chains (12) 18
Conveyor drive (13) 18
Diesel engine (17) 19
Conveyor deflection rollers (20) 19
V-belts (21) 19
Fuel tank (22) 20
Fuel filter (23) 20
Hydraulic suction filter (24) 20
Hydraulic oil reservoir (25) 20
Chain tension, conveyor (27) 21
General visual inspection 22
Check by a specialist 22
3.2 Oil drain points 23
Pump distribution gear (5) 23
Diesel engine (17) 23
Fuel tank (22) 24
Hydraulic oil reservoir (25) 24
4 Lubricating agents and operating materials 25
4.1 Hydraulic oil 26
4.2 Filling volumes 27
5 Electric Fuses 28
5.1 Main fuses (1) 28
5.2 Fuses in the main terminal box 28
5.3 Fuses on operating panel 30

A Correct use and application

☞ The „Guidelines for the Correct Use and Application of Paver Finishers“ are included in the scope of delivery for this present machine. The guidelines are part of these operating instructions and must always be heeded. National regulations are fully applicable.

The road construction machine described in these operating instructions is a paver finisher that is suited for laying mixed materials, roll-down concrete or lean-mixed concrete, track-laying ballast and unbound mineral aggregates for foundations for paving.
The paver finisher must be used, operated and maintained according to the instructions given in these operating instructions. Any other use is regarded as improper use and can cause injury to persons or damage to the paver finisher or other equipment or property.

Any use exceeding the range of applications described above is regarded as improper use and is expressly forbidden! Especially in those cases where the paver finisher is to be operated on inclines or where it is to be used for special purposes (construction of dumps, dams), it is absolutely necessary to contact the manufacturer.

Duties of the user: A „user“ within the meaning of these operating instructions is defined as any natural or legal person who either uses the paver finisher himself, or on whose behalf it is used. In special cases (e.g. leasing or renting), the user is considered to be the person who, in accordance with existing contractual agreements between the owner and the user of the paver finisher, is charged with the observance of the operating duties.
The user must ensure that the paver finisher is only used in the stipulated manner and that all danger to life and limb of the operator, or third parties, is avoided. In addition to this, it must be ensured that the relevant accident prevention regulations and other safety-related provisions as well as the operating, servicing and maintenance guidelines are observed. The user must ensure that all persons operating the paver finisher have read and understood the present operating instructions.

Mounting of attachments: The paver finisher must only be operated in conjunction with screeds that have been approved by the manufacturer. Mounting or installation of any attachments that will interfere with or supplement the functions of the paver finisher is permitted only after written approval by the manufacturer has been obtained. If necessary, the approval of local authorities must be obtained.
Any approval obtained from local authorities does not, however, make approval by the manufacturer unnecessary.

B Vehicle description

1 Application

The DYNAPAC F 6 C is a caterpillar paver finisher that is used for laying bituminous mixed material, roll-down or lean-mixed concrete, track-laying ballast and unbound mineral aggregates for foundations for paving.

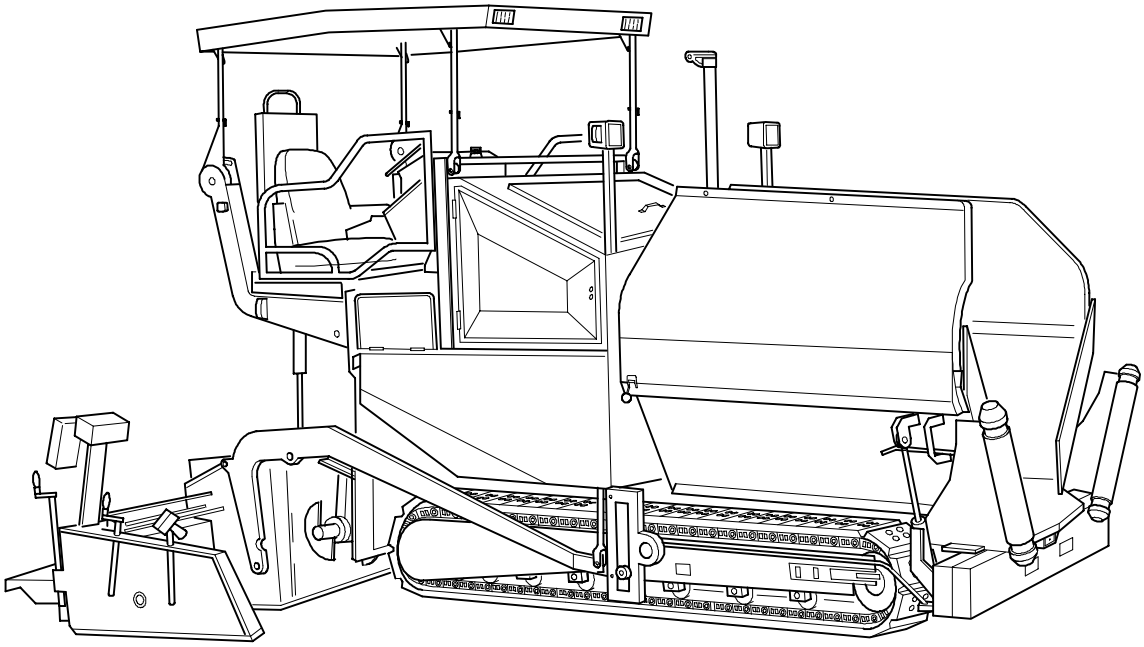

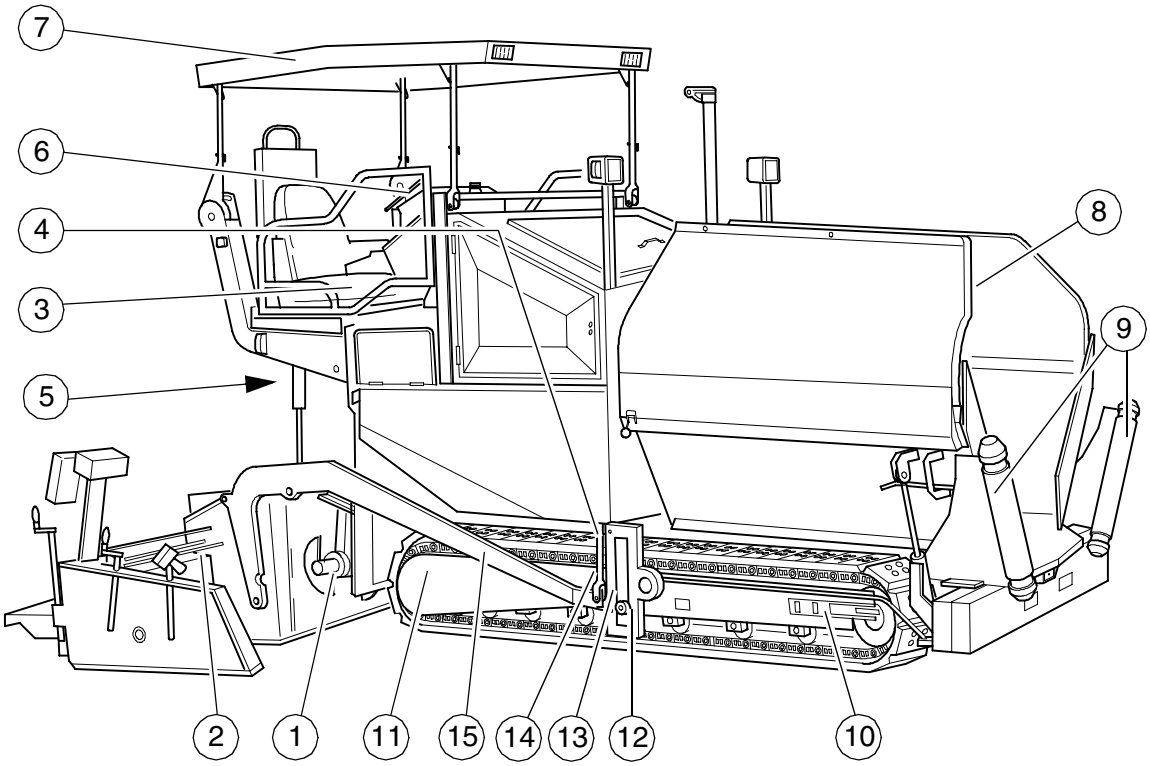

DF65C.wmf

Item		Designation
1	●	Auger
2	●	Screed
3	●	Control panel
4	●	Paving thickness indicator
5	●	Control box for screed heating
6	●	Operating panel (can be moved to either side)
7	○	Protective roof
8	●	Material compartment (hopper)
9	●	Truck push rollers
10	○	Caterpillar drive
11	●	Traction drive of the caterpillar drive
12	●	Traction roller
13	●	Crossbeam guide
14	●	Levelling cylinder for paving thickness
15	●	Arm

● = Standard equipment	○ = Optional equipment

2.1 Vehicle

Construction

The paver finisher has a welded steel frame on which the individual components are mounted.

The caterpillar drives compensate uneven areas on the ground; the suspension of the attached screed additionally helps to attain a high paving precision. The continuously adjustable hydrostatic traction drive allows the speed of the paver finisher to be matched to all work conditions.

Operation of the paver finisher is facilitated by the automatic material handling system, the separate traction drive and the clearly positioned operating and control elements.

The following extra equipment (○) is available:

- Automatic levelling/slope control system
- Additional cut-off shoe
- Larger working widths
- Protective roof
- Telescoping seat console
- Additional lighting
- Hydraulic extendable push roller cross bar

Further equipment and upgrade options on request.

Engine: The paver finisher is equipped with a air-cooled 4-cylinder Deutz diesel engine. For further information please refer to the operating instructions for the engine.

Caterpillar drive: Both caterpillar drives are directly driven by separate drives without any drive chains that would require maintenance and servicing.
The tension of the caterpillar chains can be readjusted using tensioners.
The tension of the drive chains can be mechanically adjusted.

Hydraulic system: The diesel engine drives the hydraulic pumps for all main drives of the paver finisher via the attached distribution gear and its auxiliary drive shafts.

Traction drive: The continuously adjustable traction drive pumps are connected to the traction motors by means of high pressure hydraulic hoses.
These oil motors drive the caterpillar chains via planetary gears that are mounted directly inside the drive wheels of the caterpillar chains.

Steering system/operator's platform: The independent hydrostatic traction drives allow the finisher to be turned on the spot.
The electronic synchronisation, controlled from the operating panel, ensures that the finisher runs straight ahead.

Push roller cross bar: The push rollers for material trucks are fastened to a cross bar that is pivoted at its centre.
The finisher deviates less from its course, thereby facilitating paving in curves.
A hydraulic extendable push roller cross bar which can be adapted perfectly to the filling length characteristics of the material truck is available as an option.

Material compartment (hopper): The hopper inlet is equipped with a conveyor system that empties the hopper and transfers the material to the auger.
The hopper can hold approx. 10 tons of material.
To facilitate emptying and to improve material transport, each of the lateral covers of the hopper can be hydraulically moved (○).

Material transfer: The paver finisher is equipped with two separately driven conveyors that transfer the material from the hopper to the augers.
By scanning the filling height during the paving procedure, the transfer amount is regulated fully automatically.

Augers: The augers are driven and actuated independently from the conveyors. The left-hand and the right hand half of the auger can be controlled separately. The drive system is fully hydraulic.
The conveying direction can be changed towards the centre or towards the outside. This ensures that there is always a sufficient supply of material even if an excessive amount of material is required at one side. The auger speed is continuously controlled by sensors that monitor the material flow.

Height adjustment and extension of augers: Height adjustment and extension of augers ensure optimum adaptation to a wide range of paving thicknesses and widths.

In the basic version, the height is adjusted by means of barrel nuts.
Another variant allows the height to be regulated at the control panel by means of hydraulic cylinders (○).

Auger segments of different lengths can be attached to easily adapt to the different paving widths.

Levelling/slope control system: The slope control system (○) allows the traction point to be regulated at the left-hand or the right-hand side with a defined difference to the opposite side.
To determine the actual value, the two traction arms are linked with a slope control rod.

The slope control system always operates in conjunction with the screed height adjustment of the opposite side.

By adjusting the height of the traction point of the arm (traction roller), the paving height of the material or the laying height of the screed can be controlled.
Actuation occurs electrohydraulically on both sides and can be controlled manually by means of toggle switches or automatically by means of an electronic grade control system. For further information, please refer to the operating instructions for „Levelling Systems“.

Screed lifting device: The screed lifting device is used to lift the screed during transportation. Lifting occurs electrohydraulically on both sides by actuating the hydraulic cylinders on the arms and is controlled by means of toggle switches on the operating panel.

Control box for the screed heating system: Depending on version, the screed heating system is controlled and monitored using a control box on the screed or on the rear of the machine.

3 Safety devices

Safe operation is only possible when all operating and control elements are functioning correctly and when all safety devices are in position.

☞ Check the function of these devices at regular intervals (see chapter D, section „Check list for the machine operator“).

3.1 Emergency stop button

- on the operating panel
- on the remote control units (○)

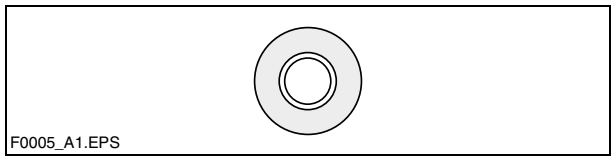

⚠ Pressing the emergency stop button switches the engine, the drives and the steering system off. Corrective measures that might be necessary (anti-collision manoeuvres, lifting the screed, etc.) are not possible in this case! Danger of accidents!

3.2 Steering

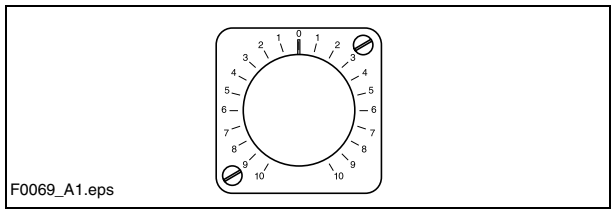

3.3 Horn

- on the operating panel
- on the two remote control units

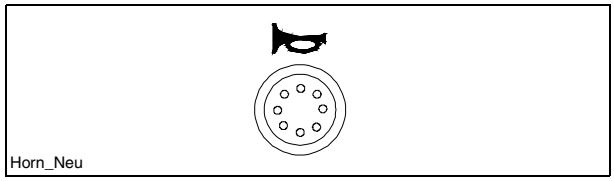

3.4 Ignition key / lights

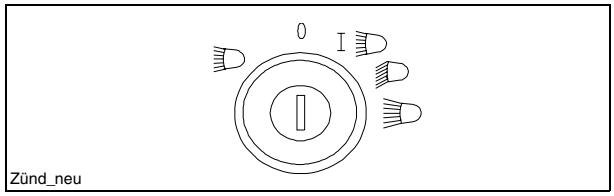

3.5 Safety devices on the gas heater system

- Bottle valve (1)
- Hose rupture protection (2)
- Main shut-off valve (3)

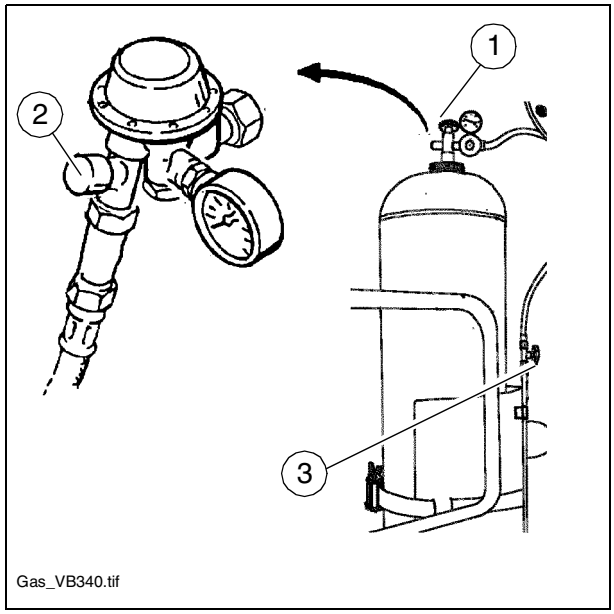

- Indicator lamps (4) on the switch cabinet
- On/Off switch (5) in the switch cabinet

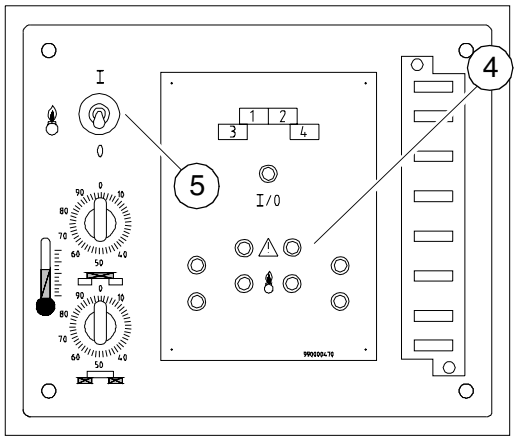

GHeiz_340.cdr

3.6 Master switch

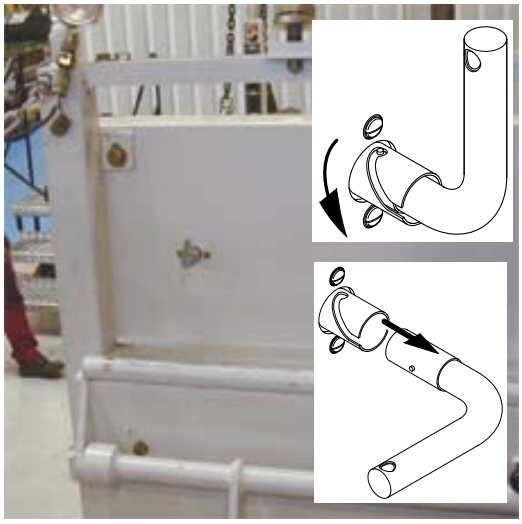

Hauptschalter_F6.jpg

3.7 Hopper transport safeguard

Muldensich_F6

3.8 Screed transport safeguard

BOHLSICH_F6.jpg

3.9 Latch for protective roof (1)

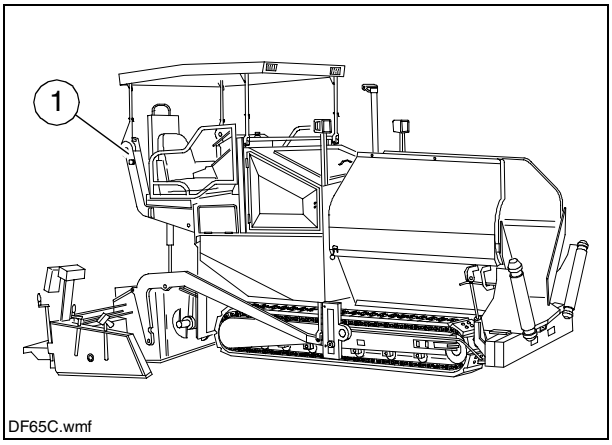

3.10 Additional safety devices

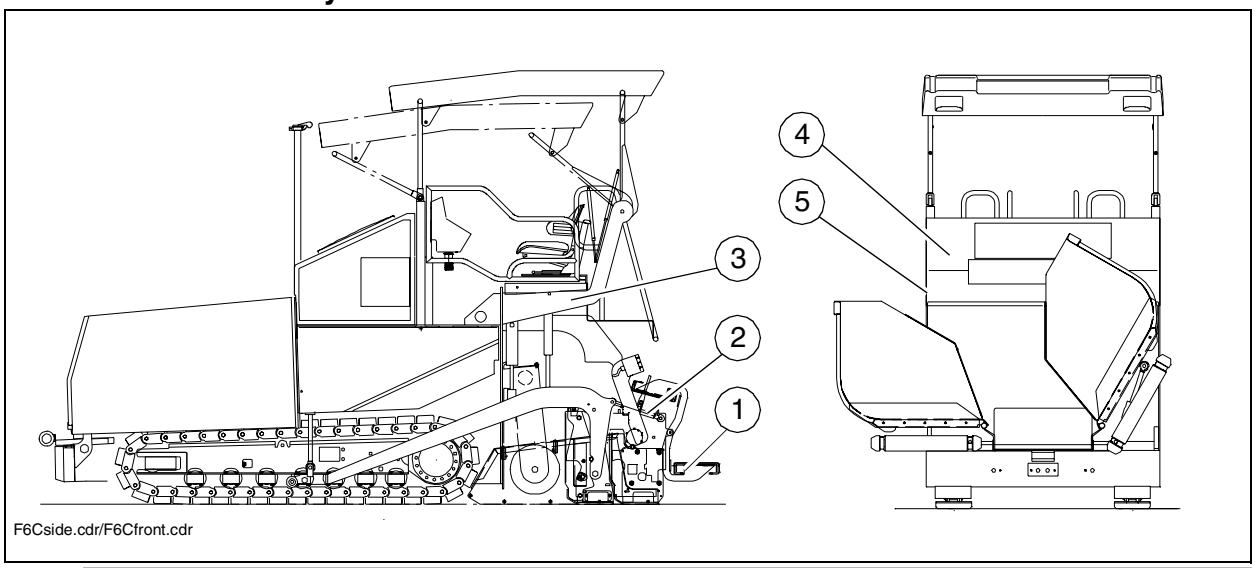

Item	Designation
1	Walkway
2	Screed coverings
3	Screed hazard flasher
4	Engine hoods
5	Side flaps

3.11 Miscellaneous equipment

- Warning triangle (○)
- First-aid kit (○)

4 Technical data, standard configuration

4.1 Dimensions

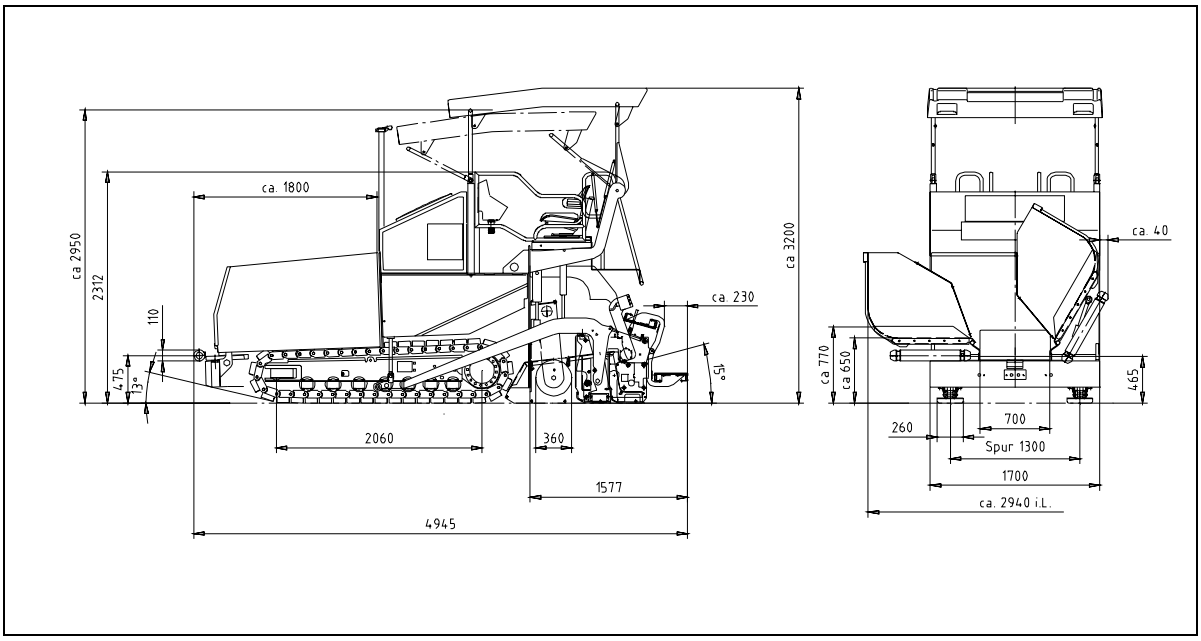

☞ For screed technical data, refer to the screed operating instructions.

4.2 Weights

Designation	F 6 C	
Paver finisher without screed	ca. 7,4	t
Paver finisher with VB 340 V/TV screed (incl. side shields)	ca.8,5	t
with extensions for max. working width:	ca. 8,7	t
with filled hopper: additionally max.	ca. 10	t

☞ For the weights of the installed screed and the screed attachments, refer to the operating instructions for the relevant screed.

4.3 Performance data

Basic width = min. paving width (without cut-off shoes)	1.70	m
Working widths - minimum paving width (with cut-off shoe) - continuously adjustable up to (for hydraulically adjustable screeds) - maximum paving widths (with attachments)	 1.10 3.40 4.40	 m
Transportation speed	0 - 3,8	km/h
Working speed	0 - 32	m/min
Paving height	0 - 270	mm
Max. grain size	40	mm
Theoretical paving performance	300	t/h

4.4 Traction drive/chassis

Drive	Hydrostatic drive, continuously controllable
Caterpillar drive	Two separately driven caterpillar drives with rubber grouser chains.
Turning capacity	Turning on the spot
Speed	See above

4.5 Engine

Make/type	Deutz BF4L 2011
Model	4-cylinder diesel engine (air-cooled)
Performance	50 kW / 68 hp (at 2300 rpm)
Volume of fuel tank	See chapter F, „Maintenance“

4.6 Hydraulic system

Pressure generation	- Hydraulic pumps via distribution gear (flange-mounted directly on the engine)
Pressure distribution	Hydraulic circuits for: - Travel drive - Material conveying and distribution - Screed tamper (○) / vibration - Cylinder actuators for steering, hopper, levelling, screed lifting, extending/retracting screed parts, auger lift (○)
Hydraulic oil reservoir - volume	See chapter F, „Maintenance“

4.7 Material compartment (hopper)

Volume	approx. 4.7 m^3 = approx. 10.1 t
Minimum inlet height, centre	465 mm
Minimum inlet height, outside	650 mm

4.8 Material conveying

Conveyors	Left and right separately controllable
Drive	Standard: mech. limit switch Option: ultrasonic sensors
Conveying volume controller	Fully automatic via configurable switching points Standard mech. limit switch Option: ultrasonic sensors

4.9 Material distribution

Augers	Left and right auger separately controllable Hydrostatic drive, variably controllable
Conveying volume controller	Fully automatic via configurable switching points, ultrasonic sensor
Auger height adjustment	- - mechanical with ratchet - - hydraulically (option)
Auger extension	With attachments (see auger extension chart in the operating instructions for the screed)

4.10 Screed control system

Special functions	At standstill: - Screed stop
Levelling system	Mechanical grade control, optional systems with and without slope control

4.11 Electrical system

On-board voltage	24 V
Batteries	2 x 12 V,72 Ah
Fuses	See chapter F, section 5 „Electric fuses“

4.12 Gas heating system for the screed (O)

Fuel (liquefied gas)	Propane gas
Gas bottles: filling volume per bottle gross weight per bottle	1 unit 70 l 33 kg
Operating pressure (behind pressure reducer)	approx. 1.5 bar
Additional data	See operating instructions for the screed

☞ For the filling volumes of lubricating and operating agents, see chapter F, „Maintenance“.

5 Location of instruction labels and type plates

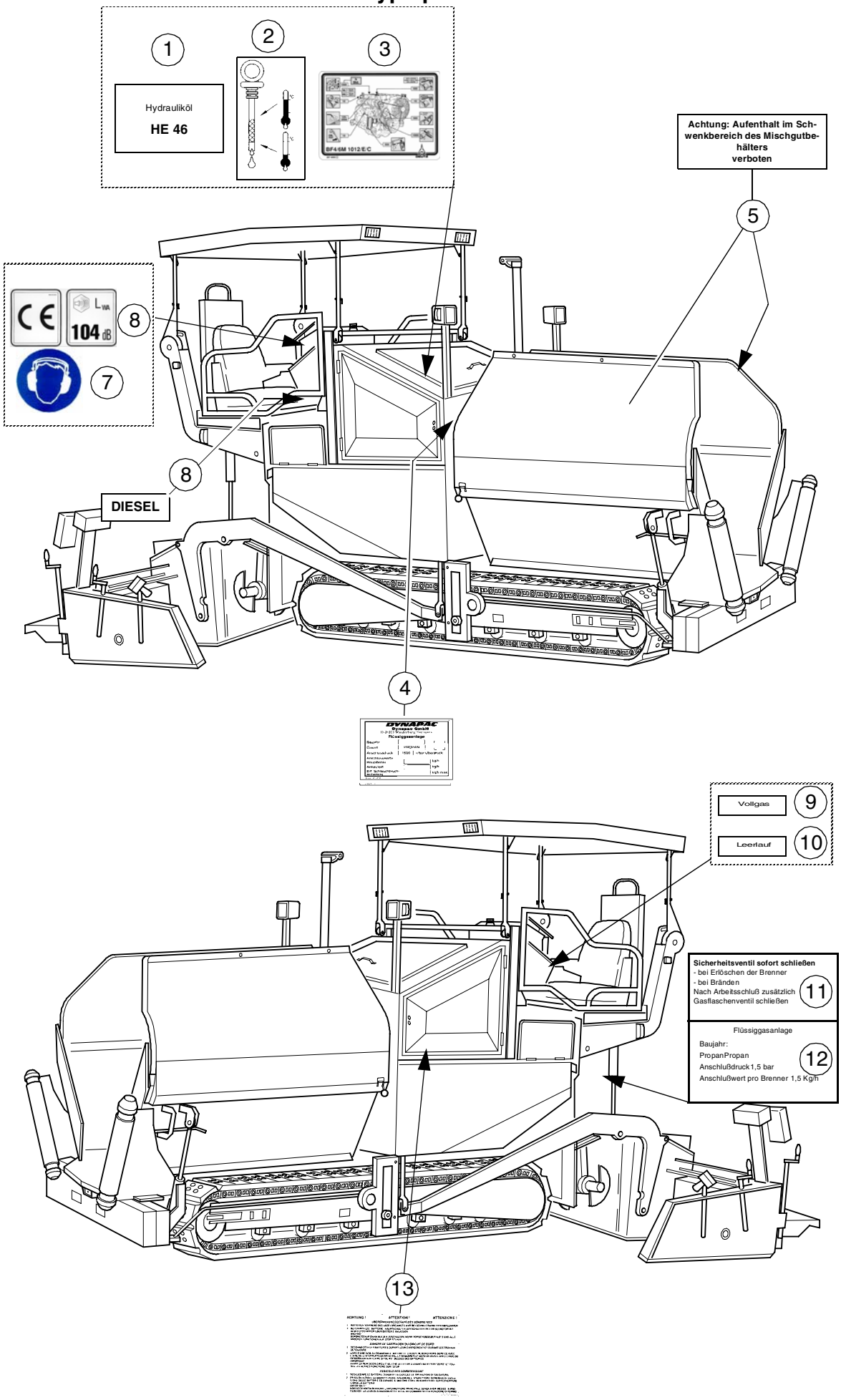

Item	Designation
1	Label „Filler neck for hydraulic oil“
2	Label „Check hydraulic oil level“
3	Label „Overview of operating materials for engine“
4	Paver finisher identification label
5	Label „Attention: Standing in the pivoting range....“
6	Label „Filler neck for diesel fuel“
7	Label „Ear protectors“
8	Label „CE and sound output level“
9	Label „Full throttle position“
10	Label „Idle speed position“
11	Label „Safety regulations for gas system“
12	Label „Liquefied gas system“(O)
13	Label „Dange of overvoltage“

5.1 Identification label for the paver finisher (4)

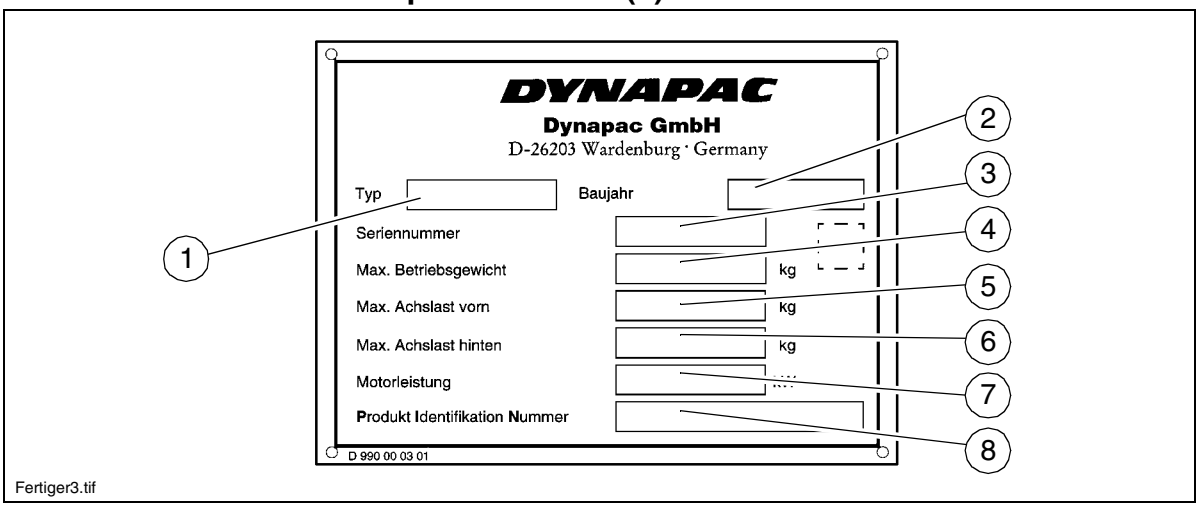

Item	Designation
1	Paver finisher type
2	Year of manufacture
3	Serial number of the paver finisher series
4	Max. permissible operating weight, incl. all attachments, in kg
5	Max. permissible load on the front axle, in kg
6	Max. permissible load on the rear axle, in kg
7	Rated performance in kW
8	Product identification number (PIN)

☞ The punched vehicle identification number on the paver finisher must match the product identification number (8).

5.2 Identification label for the liquefied gas system (12)

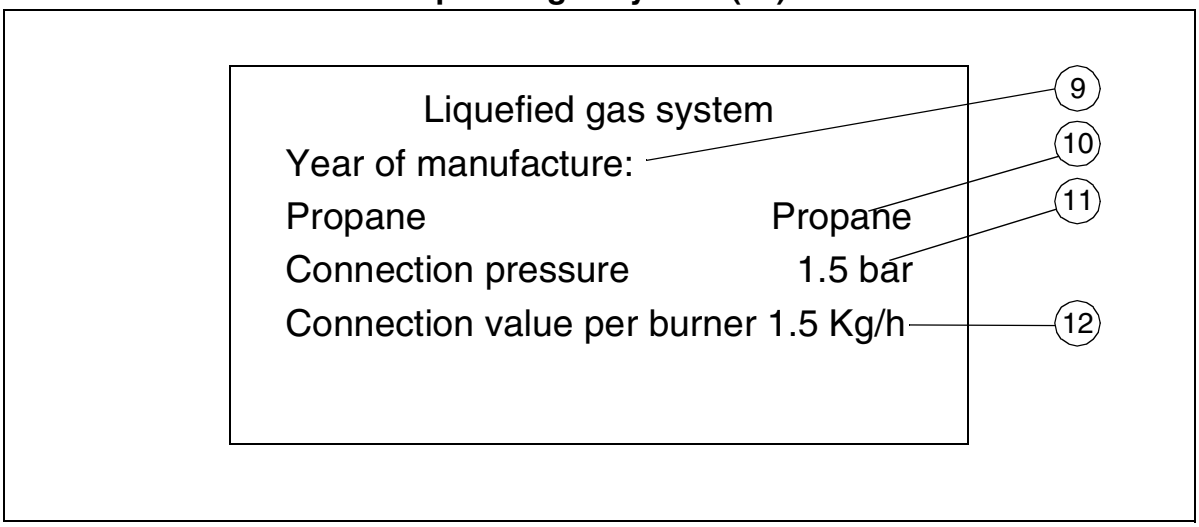

Item	Designation
9	Year of manufacture
10	Type of gas to be used
11	Connection overpressure in bar
12	Average gas consumption of the installed screed, in kg/h

6 EN standards

6.1 Continuous sound pressure level

⚠ The operator always must use ear protection. The immission value at the driver's ears may fluctuate severely depending on the materials used for paving, and may exceed 85 dB (A). If no ear protection devices are used, hearing can be impaired.
The sound emission level of the finisher has been measured under free-field conditions according to the draft of ENV 500-6, dated March 1997, and ISO 4872.

Sound pressure level in the driver's seat (at head height): L_{AF} = 85,0dB(A)

Sound output level: L_{WA} = 103,5 dB(A)

Sound pressure level at the machine

Measuring point	2	4	6	8	10	12
Sound pressure level L_{AFeq} (dB(A))	74,5	73,1	73,0	74,0	75,2	76,1

6.2 Operating conditions during measurement

The diesel engine was running at maximum speed. The screed was fixed in the transportation position. Conveyors, augers, tampers and vibration were running at least at 50% of the maximum speed.

6.3 Measuring point configuration

Hemispherical measuring surface with a radius of 10 m. The machine was at the centre. The measuring points had been assigned the following coordinates:

	Measuring points 2, 4, 6, 8			Measuring points 10, 12		
Coordinates	X	Y	Z	X	Y	Z
	±11.2	±11.2	1.5	- 4.32 +4.32	+10.4 -10.4	11.36 11.36

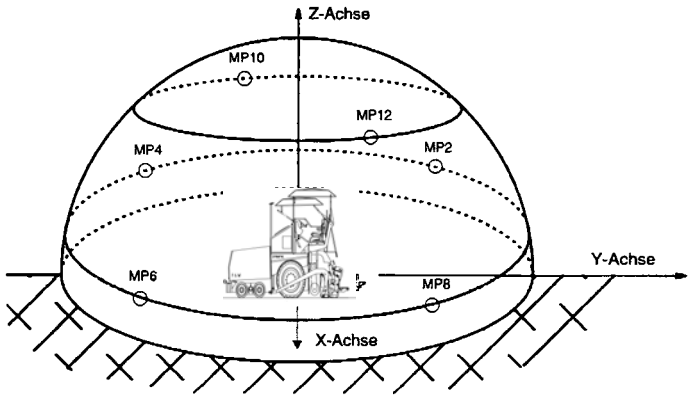

SCHALL.TIF

6.4 Vibration acting on the entire body

When the machine is used properly, the weighted effective acceleration values at the driver's seat of a_w = 0.5 m/s^2 according to the draft of prEN 1032-1995 are not exceeded.

6.5 Vibrations acting on hands and arms

When the machine is used properly, the weighted effective acceleration values at the driver's seat of a_{hw} = 2.5 m/s^2 according to the draft of prEN 1033-1995 are not exceeded.

6.6 Electromagnetic compatibility (EMC)

The following limit values are observed according to the stipulations of the EMC Directive 89/336/EEC/08.95:

- Interference emission according to DIN EN 50081-1/03.93:
  < 40 dB µV/m for frequencies of 30 MHz - 230 MHz measured at a distance of 3 m
  < 47 db µV/m for frequencies of 20 MHz - 1 GHz measured at a distance of 3 m

- Interference immunity against electrostatic discharge (ESD) according to DIN EN 61000-4-2/03.96:
  The paver finisher did not show any discernible reactions to contact discharges of ± 4 KV and to air discharges of ± 8 KV.
  The modifications according to test criterion „A“ are adhered to, i.e. the paver finisher continues to work without malfunction during the test.

☞ Electrical or electronic components and their arrangement may only be modified after written approval from the manufacturer has been obtained.

C Transportation

1 Safety regulations for transportation

⚠ Accidents may occur when the paver finisher and the screed are not properly prepared for transportation or when transportation is carried out improperly!

Remove and secure all protruding parts (such as the levelling device, auger limit switches, etc.).

Close the hopper lids and engage the hopper transport safeguards. Lift the screed and engage the screed transport safeguards. Fold down and secure the protective roof.

Pack all parts that are not permanently fixed to the paver finisher and the screed into the appropriate boxes and into the hopper.
Close all coverings and check that they are securely seated.

In Germany, gas bottles must not be transported on the paver finisher.
Disconnect the gas bottles from the gas system and protect them with their caps. Use a separate vehicle to transport them.

When loading via ramps, the paver finisher may slip aside, tilt or topple over.

STOP Drive carefully! Keep personnel out of the danger area!

Additional stipulations for transportation on public roads:

⚠ In Germany; caterpillar pavers **must not be driven as self-propelling vehicles** on public roads.
Note that in other countries different regulations may apply.

The operator must be in the possession of a valid permit for vehicles of this type.

The operating panel must be moved to the side of the oncoming traffic and secured in this position.
The driving lights must be properly adjusted.

Only attachments and accessories may be transported in the hopper, no material or gas bottles!

If necessary, the operator must be assisted by a second person when driving on public roads – especially at road crossings and junctions.

2 Transportation on low-bed trailers

⚠ Reduce the paver finisher and the screed to their basic widths; also remove any attached side plates. To prevent damage to the screed, the inclination of the ramp to be used must not exceed 15° (26 %).

2.1 Preparations

- Prepare the paver finisher for operation (see chapter D).
- Use switch (1) to close the hopper lids. Engage both hopper transport safeguards (2).
- Set switch (3) to „OFF“ (automatic off) and raise screed with switch (4). Engage the screed transport safeguards (5).
- To extend the levelling cylinders:
  - Turn the preselector (6) to zero. Move the drive lever (7) forward.
  - Push the switch (8) downward until the levelling cylinders are completely extended.
  - Set the drive lever (7) to the centre position.
- Retract the screed parts until the screed matches the basic width of the paver finisher.
- Remove all protruding or loose parts from the paver finisher and the screed (see also the „operating instructions for the screed“). Store these parts in a safe place.
- If an optional screed with a gas heater system is fitted:
- Remove the gas bottle for the screed heater system:
  - Close the main shut-off valve and the bottle valve.
  - Unscrew the valve on the bottle, install the protective cap and remove the gas bottle from the paver finisher.
  - Transport the gas bottle on a second vehicle, adhering to all safety regulations.

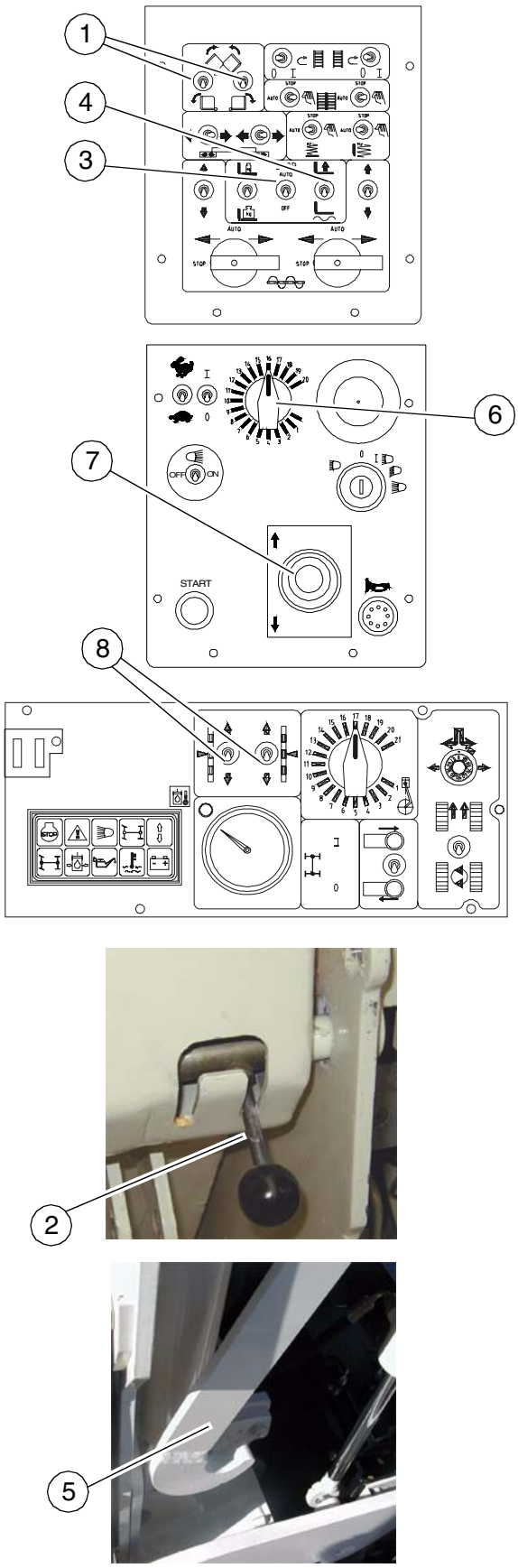

Element1_F6.cdr,Element2_F6C.cdr,Element3a_F6C.cdr,Muldensich_F6.jpg
Bohlentransp_F6.jpg

2.2 Driving onto the low-bed trailer

Make sure that there are no persons in the danger area during loading.

- Use the work gear and low engine speeds to drive onto the low-bed trailer.
- Lower the screed onto wooden blocks on the low-bed trailer.
- Switch off the paver finisher.
- Attach and secure the protective hood to protect the operating panel.
- If necessary, swing down the protective roof:
- Release the locking bolts (8) on both sides of the suspension and fold the roof down. When it is in the lower position, secure it again with the bolts (8).

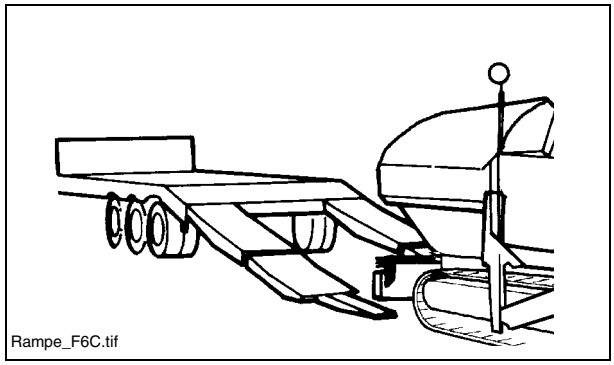

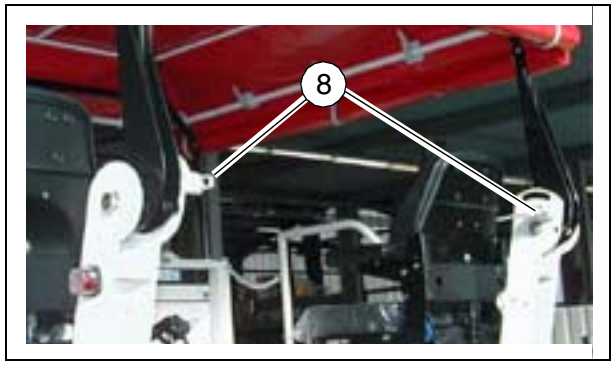

Do not insert fingers into the jointed areas! Danger of crushing!

- Secure the paver finisher to the low-bed trailer:
- Use only appropriate, approved attachment devices.
- Use the four securing points provided (13, 14).
- Wait until the exhaust extension tube has cooled down; then remove it and store it.

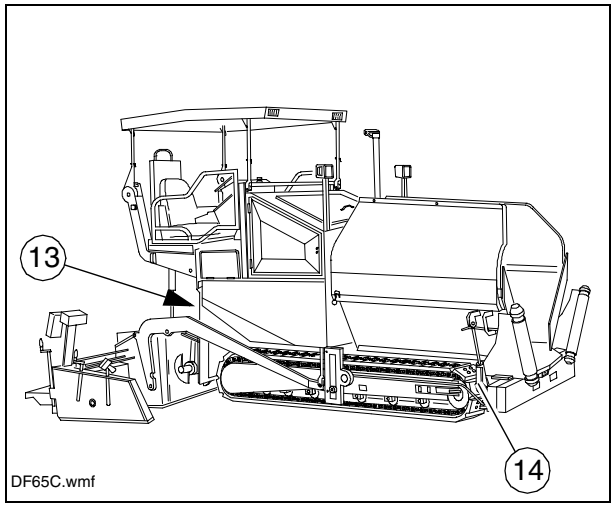

2.3 After transportation

- Remove the attachment devices.
- Swing up the protective roof, where applicable:
  - Release the locking bolts, raise the protective roof and lock again.
- Lift the screed to the transportation position and lock it.
- Start the engine and drive from the trailer at a low engine/traction speed.
- Park the paver finisher in a secure spot, lower the screed and switch off the engine.
- Remove the key and/or cover the operating panel with the protective hood and secure it.

3 Transportation on public roads

⚠ Reduce the paver finisher and the screed to their basic widths; also remove any attached side plates.

3.1 Preparations

- Set switch (1) to „Stop“ to switch off the conveyor drive.
- Use switch (2) to close the hopper lids. Engage both hopper transport safeguards (3).
- Set switch (4) to „OFF“ (automatic off) and raise screed with switch (5). Engage the screed transport safeguards (6).
- To extend the levelling cylinders:
  - Turn the preselector (7) to zero. Swivel the drive lever (8) forward.
  - Push the switch (9) downward until the levelling cylinders are completely extended.
  - Set the drive lever (8) to the centre position.
- Retract the screed parts until the screed matches the basic width of the paver finisher.
- Remove all protruding or loose parts from the paver finisher and the screed (see also the „operating instructions for the screed“).
  Stow the components safely, e.g. place in hopper for transport.
- If an optional screed with a gas heater system is fitted:
- Remove the gas bottle for the screed heater system:
  - Close the main shut-off valve and the bottle valve.
  - Unscrew the valve on the bottle, install the protective cap and remove the gas bottle from the paver finisher.
  - Transport the gas bottle on a second vehicle, adhering to all safety regulations.

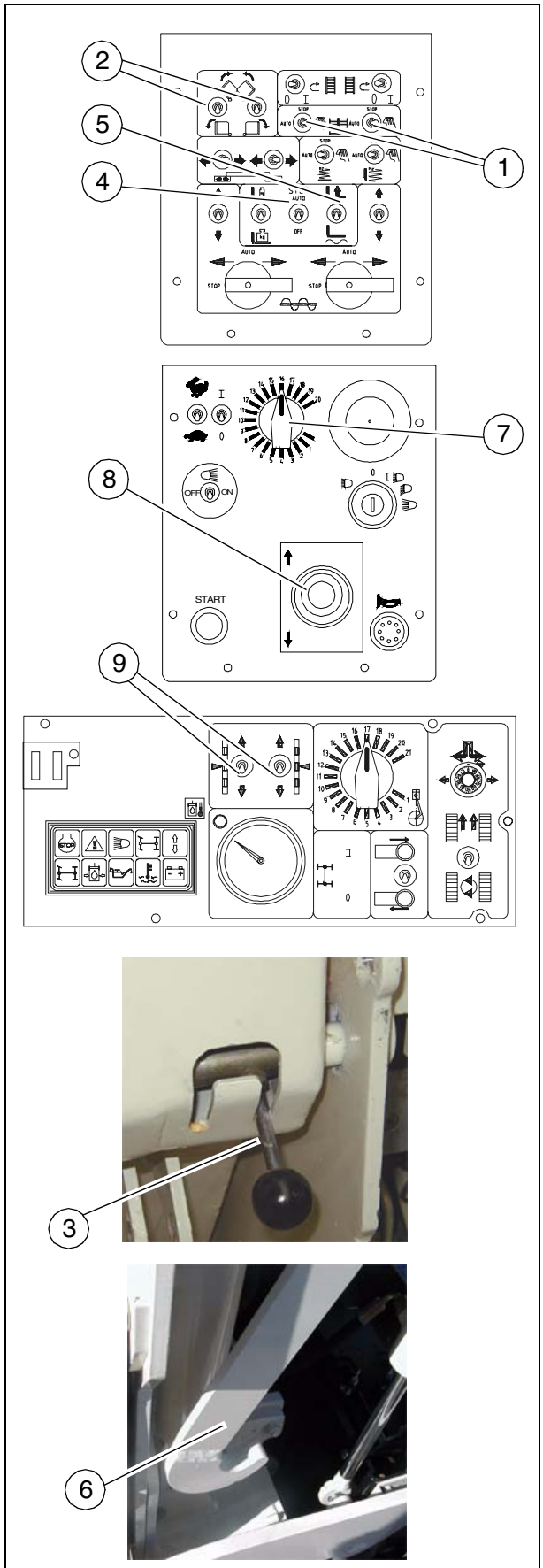

Element1_F6.cdr,Element2_F6C.cdr,Element3a_F6C.cdr,Muldensich_F6.jpg
Bohlentransp_F6.jpg

3.2 Driving on public roads

- Set the Fast/Slow switch (1) to “Hare”.
- Turn the preselector (2) to maximum.
- Use the drive lever (3) to regulate the speed.
- Press the emergency stop button when a dangerous situation arises!

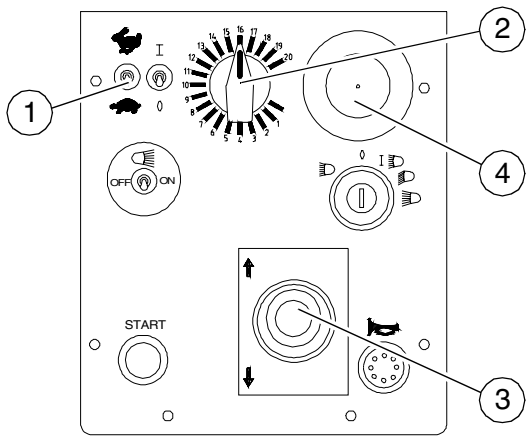

Element2_F6C.cdr

4 Loading by crane

⚠ Use only lifting gear that can bear the load.
(For the weights and dimensions, see chapter B, sections 4.1 and 4.2)

☞ Four lifting eyes (13, 14) are provided for loading the vehicle with a crane.

- Park the paver finisher and render it safe.
- Engage the transport safeguards.
- Reduce the paver finisher and the screed to their basic widths.
- Take off all protruding or loose parts and the gas bottles for the screed heating system.
- Attach the lifting gear to the four lifting eyes (13, 14).

⚠ Make sure that the paver finisher remains in a horizontal position during lifting!

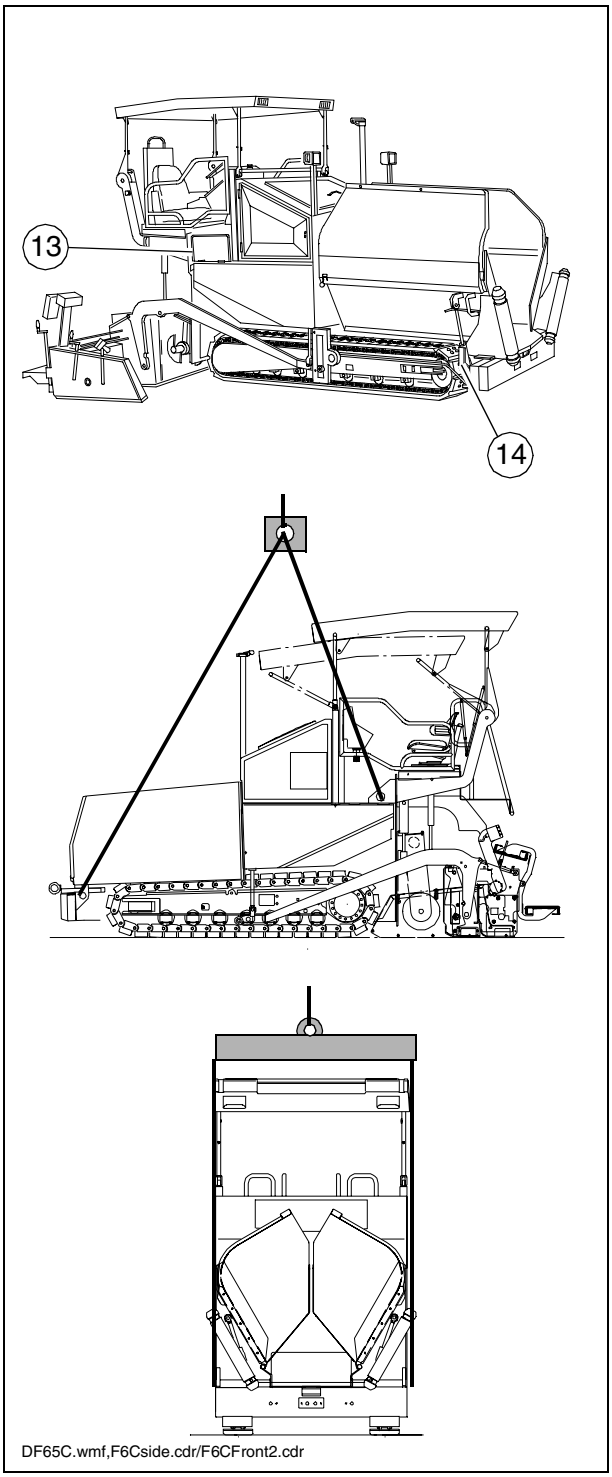

5 Towing

Heed all regulations and apply all safety measures applicable for towing heavy construction machines.

The towing vehicle must be capable of securing the paver finisher, even on slopes. Use only approved tow bars!

If necessary, remove any attachments and accessories from the paver finisher and the screed until the basic width has been attained.

Only release the traction system brakes when the machine is sufficiently secured against accidental rolling or is already properly connected to the towing vehicle.

- Remove locking screw (1).
- Release lock nut (2), screw threaded dowel (3) into pump as far as possible and secure with lock nut.
- Actuate lever (4) of hand pump until sufficient pressure has been built up and traction system brakes have been released.

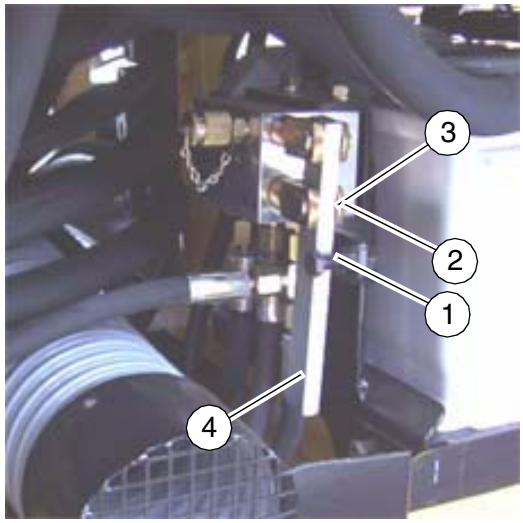

Pump_F6C.jpg

Always only tow the shortest distance to the means of transport or the next parking possibility.

Following towing, unscrew the threaded dowel (3) a few turns again and lock with the lock nut (2).
The traction system brakes are no reactivated and the machine is secured against rolling.
The pump lever should be locked when the upper cylinder (5) is retracted.

- Replace locking screw (1)

Now carefully and slowly tow the paver finisher out of the construction area.

- Attach the tow bar to the coupling (17) located in the bumper.
- Carefully and slowly tow the paver finisher out of the construction site or the danger area (use the shortest possible distance).

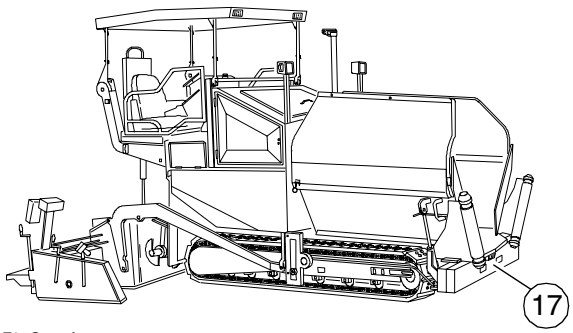

DF65C.wmf

6 Safely parking the vehicle

When the paver finisher is parked at a location accessible to the public, it must be secured in such a way that unauthorized persons or playing children cannot damage the vehicle. Pull off the ignition key and the main switch (18) and take them with you – do not hide them anywhere on the machine.

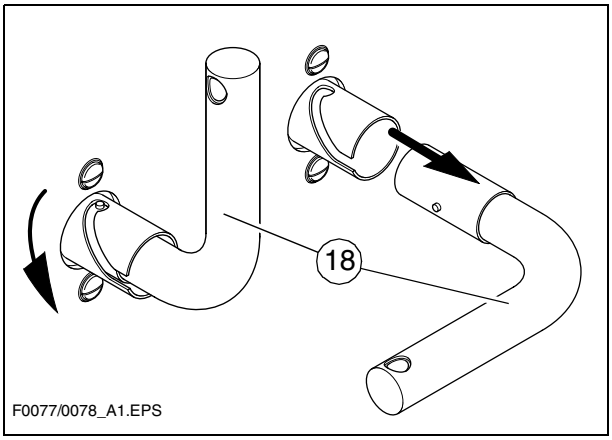

- Protect the operating panel with the dust cover (19) and lock it.
- Store loose parts and accessories in a safe place.

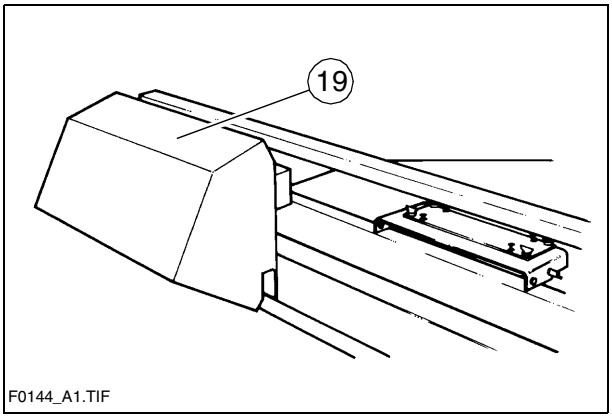

D Operation

1 Safety regulations

Starting the engine, the traction drive, the conveyor, the auger, the screed or the lifting devices can cause injuries or even the death of persons.
Make sure before starting any of these devices that no-one is working at, in or beneath the paver finisher or within its danger area!

- Do not start the engine or do not actuate any controls when this is expressly forbidden!
  Unless otherwise specified, the controls may only be actuated when the engine is running!

Never crawl into the auger tunnel or step into the hopper or onto the conveyor. Danger to life and limb!

- Always make sure during operation that no-one is endangered by the machine!
- Ensure that all protective covers and hoods are fitted and secured accordingly!
- Immediately rectify any damage which is determined! Operation is impermissible if the machine is defective!
- Do not let any persons ride on the paver finisher or the screed!
- Remove obstacles from the road and the work area!
- Always try to choose a drivers's position that is opposite to the flowing traffic! Lock the operating panel and the driver's seat.
- Keep a sufficient safety clearance to overhanging objects, other machines and points of danger!
- Be careful when travelling on rough terrain to keep the paver finisher from slipping, tipping or turning over.

Always be the master over the machine; never try to use it beyond its capacities!

2 Controls

2.1 Operating panel

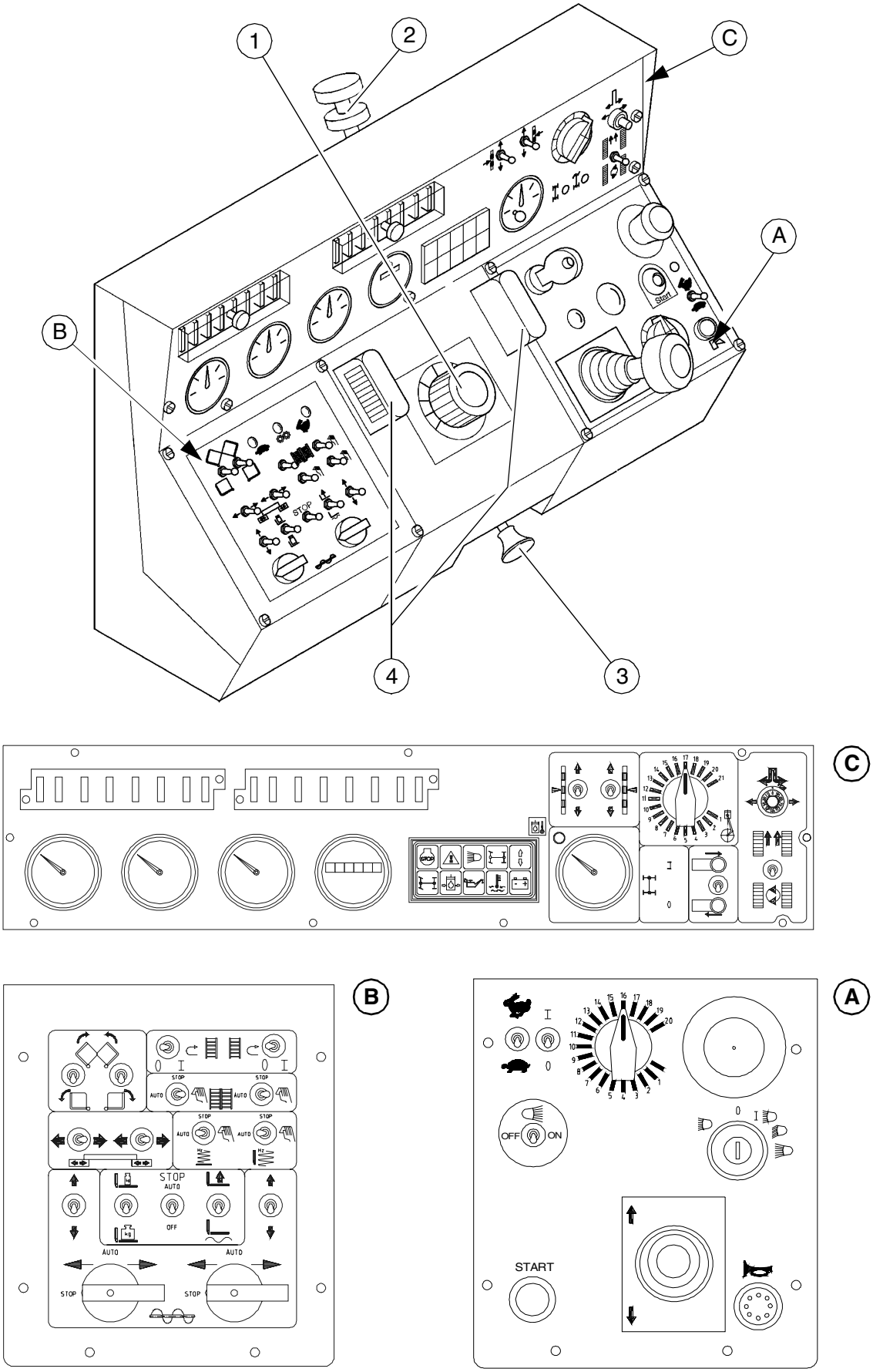

Bed_konv_C2.tif, Element1_F6.cdr, Element2_F6C.cdr, Element3_F6C.cdr

D F6C.GB 2-50 0504

Item	Designation	Brief description
1	Steering potentiometer	The steering wheel movement is transferred electrohydraulically. STOP If the straight-ahead travel control fails (position"0“ = straight-ahead), fine-tuning can be performed using the adjustment function for straight-ahead travel. For turning on the spot, refer to switch (turning on the spot).
2	Latch for operating panel	For securing the movable operating panel against inadvertent movement. - Turn the knurled screw at the desired location into the designated notch and secure with the knurled nut. STOP When not secured, the operating panel can move. Danger of accidents during transportation!
3	Latch for operating panel	In the case of seats that can be swung out beyond the machine contour (option), the operating panel can also be moved beyond the basic width of the paver finisher. Pull out the latch and move the operating panel; let the latch engage again. STOP An unlatched operating panel can slide out of position. Danger of accidents during transportation!
4	Lighting	Lights up instrument panel A/B when the parking light is switched on.

A

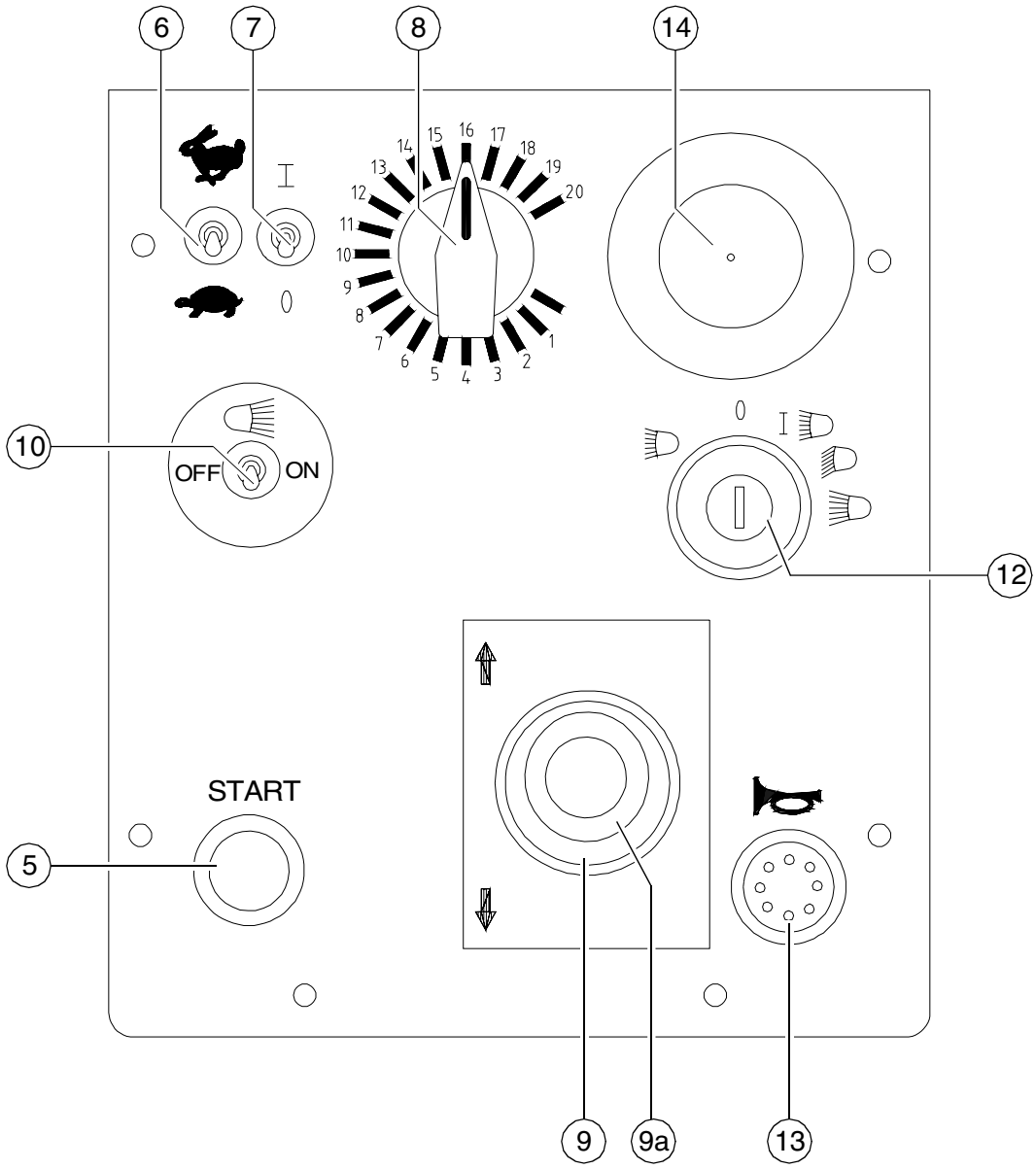

Element2_F6C.cdr

D F6C.GB 4-50 0504

Item	Designation	Brief description
5	Starter	Starting is only possible when the driver lever is in the neutral position. All emergency stop buttons (on the operating panel and the remote controls) must be pulled out.
6	Traction drive speed - fast/slow	Hare: transportation speed Tortoise: operating speed for paving - Change the speed when the paver finisher is at a standstill!
7	not in use	
8	Traction drive preselector	For setting the maximum speed that can be reached when the drive lever is at its stop. ☞ The scale roughly matches the speed in m/min (during paving).
9	Drive lever (forward - reverse)	For switching on the paver finisher functions and for continuously regulating the traction speed – forward or reverse. Zero position: starting is possible; no traction; protection against inadvertent starting. To move the lever, pull up the ring (9 a). Depending on the position of the drive lever, the following functions can be activated: - 1st position from the central position:Conveyor and auger on. - 2nd position from the central position: Screed drive (tamper/vibration), levelling on; traction drive on; increase speed to stop. Use the preselector to set the maximum speed.
10	Auxiliary lighting (O)	Engagement and disengagement of auxiliary headlights available on the optional electrical system.
11	not in use	

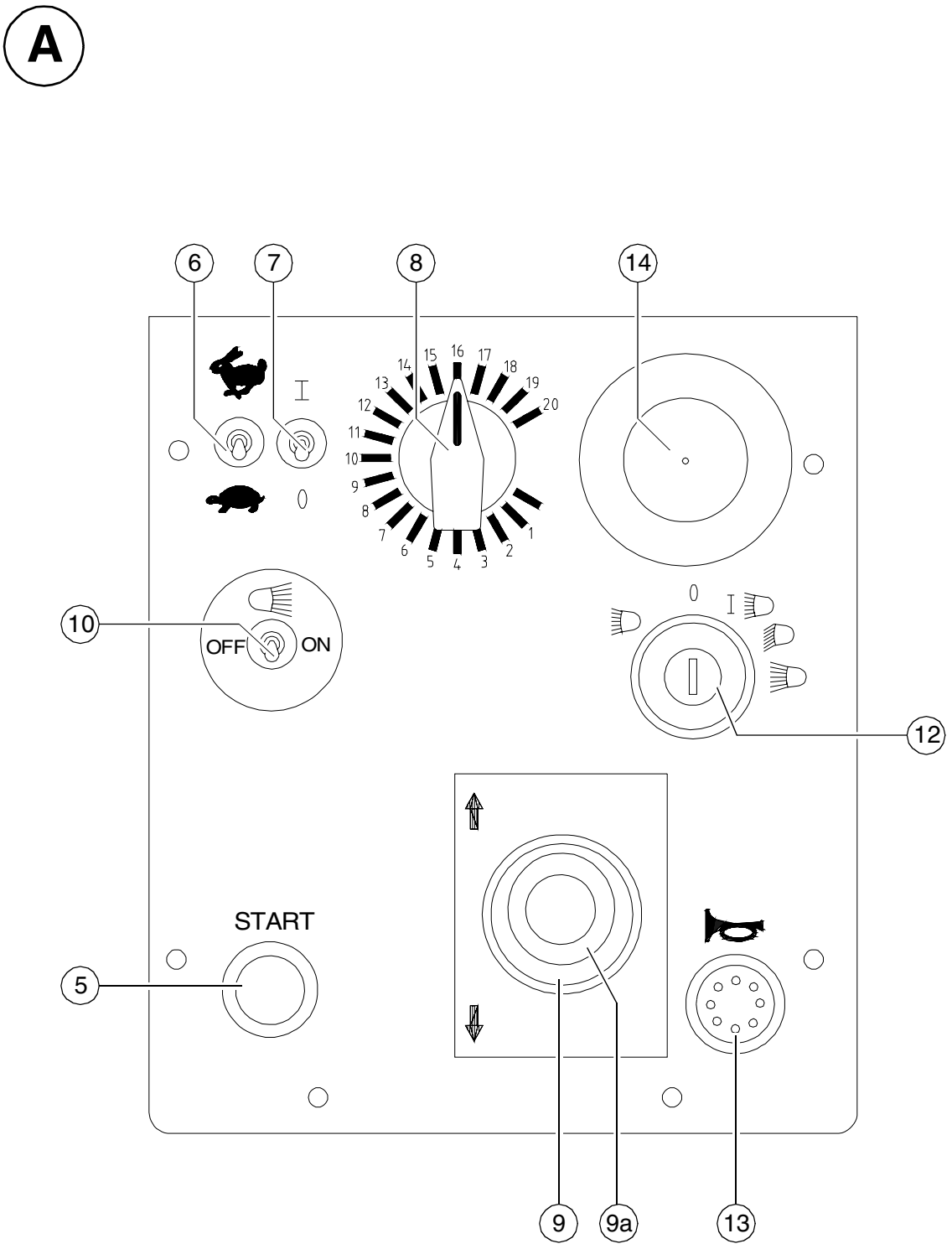

Element2_F6C.cdr

D F6C.GB 6-50 0504

Item	Designation	Brief description
12	Ignition lock and light switch	Key positions: 1 Ignition on 2 Parking/rear lights, instrument panel illumination, working lights (if applicable) 3 Not in use 4 Not in use ☞ To overcome the lock between positions 2 and 3, press in the key. Turning the key to the right = parking light
13	Horn	Press in the case of emergencies and to indicate when the machine starts to move!
14	Emergency stop button	Press in an emergency (danger to persons, possible collision etc.)! - Pressing the emergency stop button switches the engine, the drives and the steering system off. Making way, lifting the screed or other actions are then no longer possible! Danger of accidents! - The emergency stop button does not shut off the gas heater system (O). Close the main shut-off valve and the valves on the bottles by hand! - In the case of electrical malfunctions, the engine must be turned off manually at the leverage of the injection pump. To restart the engine, the button must be pulled out again.
15	not in use	

B

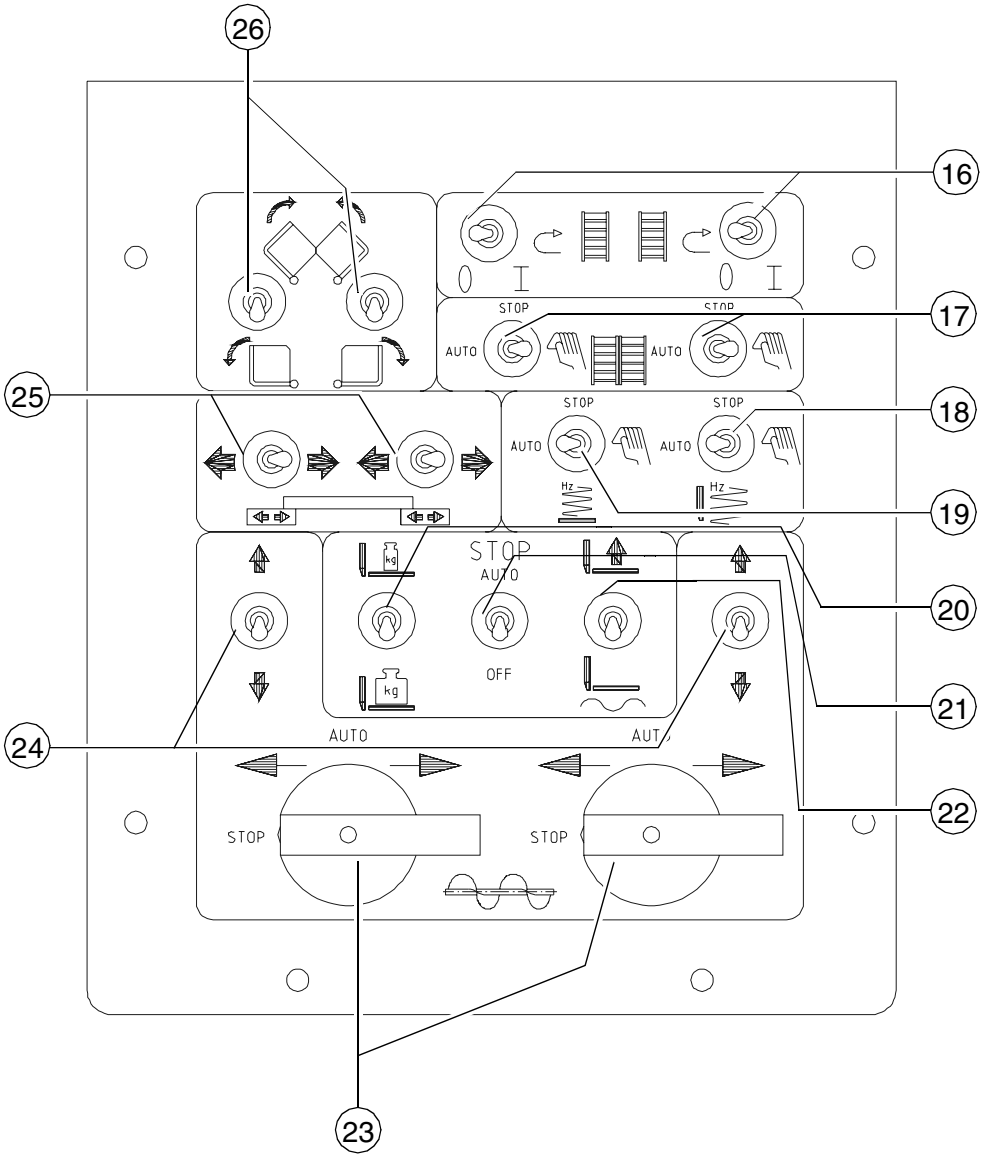

Element1_F6.cdr

D F6C.GB 8-50 0504

Item	Designation	Brief description
16	Reversing switch for conveyor	The conveyor's direction can be reverse separately for both halves of the conveyor, in order to slightly reverse any material which may be positioned just in front of the auger. This enables the avoidance of e.g. material loss during transportation.The conveyor covers a distance of approx. 0,5 meter towards the hopper. ☞ If necessary, the switch can be actuated an arbitrary number of times to reverse the conveyor over a longer distance.
17	Conveyor left/right	**auto:** switched on with drive lever and controlled via the material limit switch in the tunnel **stop:** Off **manual:** permanently switched on (with full feed capacity, without material control) - To automatically operate the conveyor via the remote control, both switches must be set to „auto“.
18	Tamper (screed-specific)	**auto:** switched on with drive lever switched off when at a standstill **stop:** completely switched off **manual:** permanently switched on As a rule, „auto“ is used for paving. ⚠ When the switch is set to „manual“ during paving, it must be set to „stop“ when at a standstill. Otherwise, excessive compacting occurs! ☞ Speed control (see the section „Speed regulator, tamper“).
19	Vibration	Operation and application: see switch (Tamper). Speed control (see the section „Speed regulator, vibration“).

B

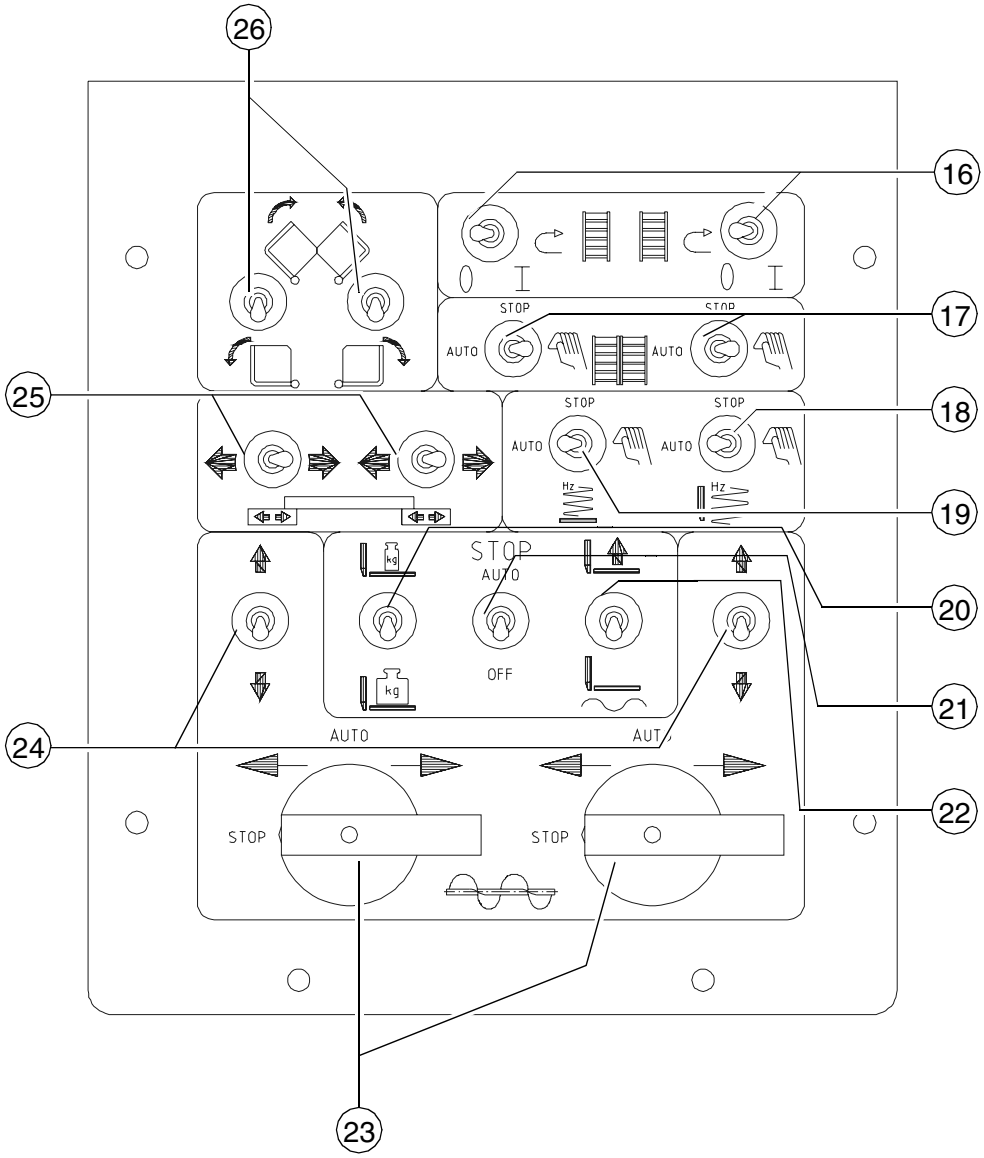

Element1_F6.cdr

D F6C.GB 10-50 0504

Item	Designation	Brief description
20	not in use	
21	Deactivation of floating position STOP AUTO A OFF C	„Deactivation of floating position“ is used to lock the screed hydraulics to keep the screed from sinking into the material when the paver finisher is at a standstill (intermediate stop). **A:** automatic when the drive lever is in the central position 1 - Position **C** is used for setting up the paver finisher, position **A** for paving. **C:** permanently deactivated
22	Screed position A B C	**A:** Lift screed **B:** Hold screed (position for inserting the screed transport safeguard (90)) **C:** Lower screed and assume the „floating position“ ⚠ During paving, the screed must always be in the floating position. This also applies to intermediate stops and truck changes when the automatic screed stop (21) is used.

B

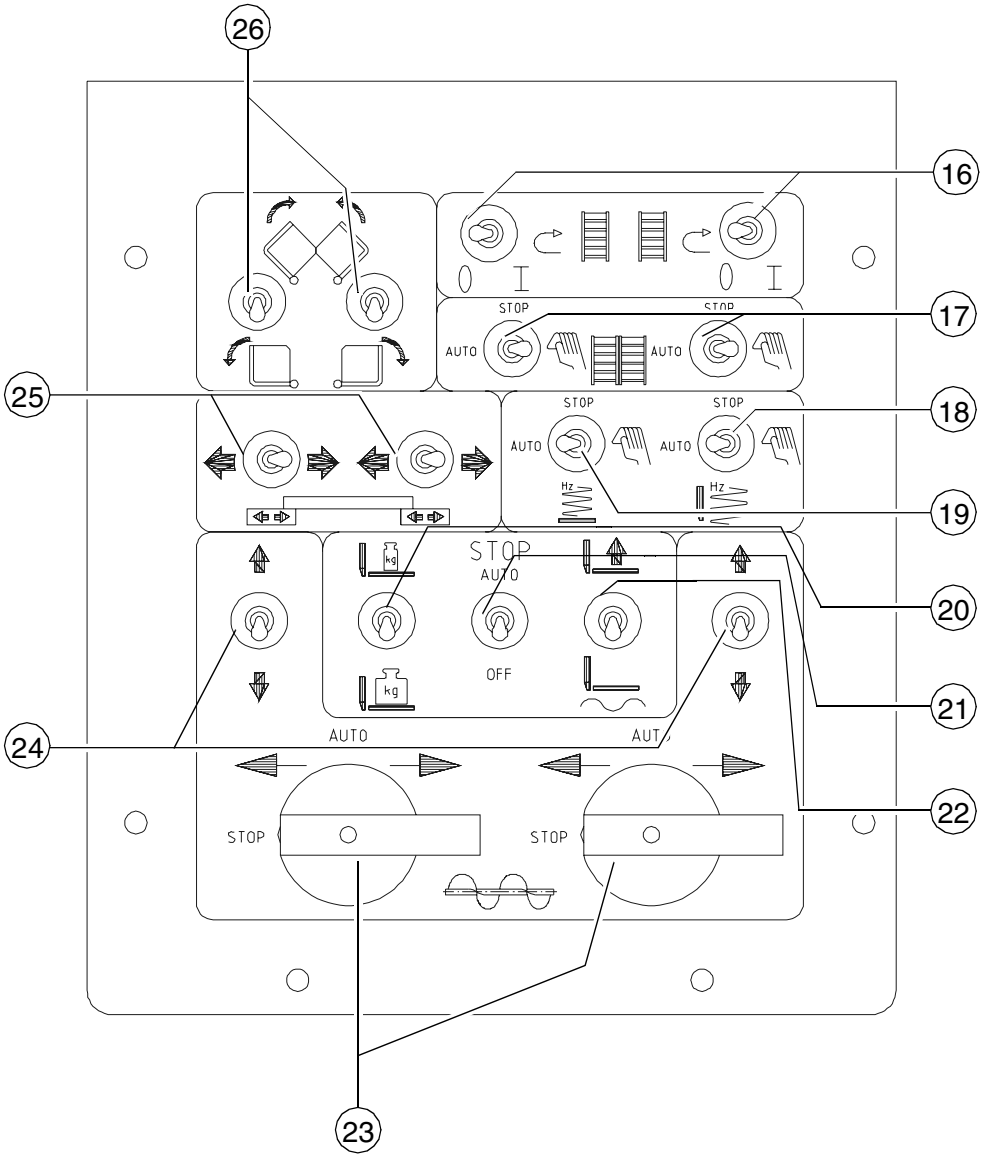

Element1_F6.cdr

D F6C.GB 12-50 0504

Item	Designation	Brief description
23	Auger left/right 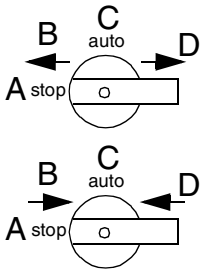 	**A stop:** Off **B manual:** feeding outwards **C auto:** switched on with driver lever and Material limit switch on the auger continuously controlled **D manual:** feeding inwards ☞ In positions (B) and (D), the auger half is running permanently (with full feed capacity, without automatic material control). If the auger is to be actuated automatically via the ultrasonic sensor, both switches must be set to „auto“.
24	Adjustment of the auger box up/down (○)	This changes the height of the auger if the auger is hydraulically adjustable. - The height can be read off on the scales to the left and the right of the auger box. Rule of thumb: paving thickness plus 5 cm (2 inches) equals the auger height. ⚠ Actuate both switches at the same time as the auger box otherwise pulls to one side!
25	Extend/retract screed	In the case of variable screeds, the extendable parts can be hydraulically extended/retracted with this switch.
26	Open/close hopper	Top: Close hopper halves Centre: No function Bottom: Open hopper halves Separate actuation (○): - One switch per hopper half: Is required when paving in spaces where there is only limited space at one side or when obstacles obstruct unloading of the truck.

C

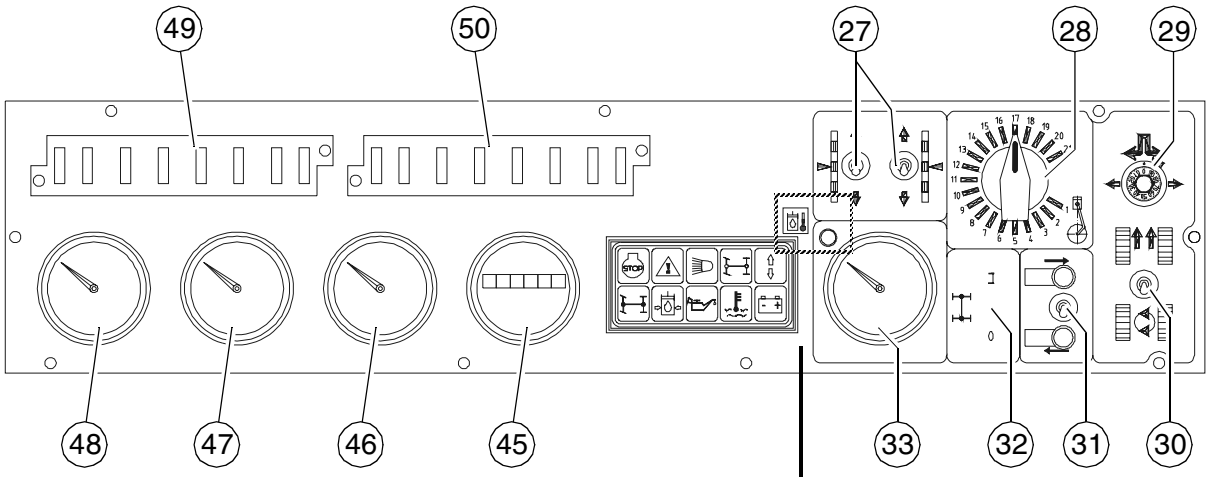

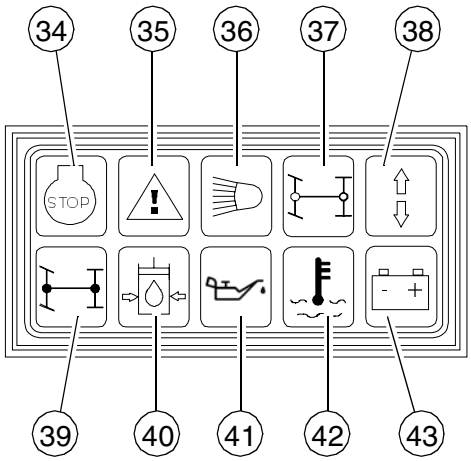

Element3_F6C.cdr, Kontrollleucht_F6.cdr

D F6C.GB 14-50 0504

Item	Designation	Brief description
27	Levelling cylinder left/right	For manually actuating the levelling cylinders when automatic levelling is switched off. Switch on the remote control must be set to „manual“.
28	not in use	
29	Straight-ahead travel synchronisation	This potentiometer is used to set straight-ahead travel to an optimum setting while the vehicle is in motion in the event of failure of the straight-ahead travel control function. - Set the steering wheel to position “0”; then adjust the potentiometer until the finisher is travelling straight ahead.
30	Turning on the spot	Switch at the top position: Normal position for straight-ahead travel. ☞ If the switch has been inadvertently set to the bottom position (with the steering wheel set to straight-ahead travel), the finisher does not move. This is often interpreted as a ‘malfunction’. Switch at the bottom position: The finisher turns on the spot (the caterpillar chains run in opposite directions) when the steering wheel is set to “10”. Steering knob turned to the left = finisher turns to the left Steering knob turned to the right = finisher turns to the right STOP When the finisher turns, persons and objects next to the finisher are in extreme danger. Watch the area where the finisher turns!
31	Retract/extend push roller crossbar (O)	⚠ When this switch is actuated, the push roller crossbar retracts or extends hydraulically. ☞ To adapt to suit the infeed length of the material truck.
32	not in use	

C

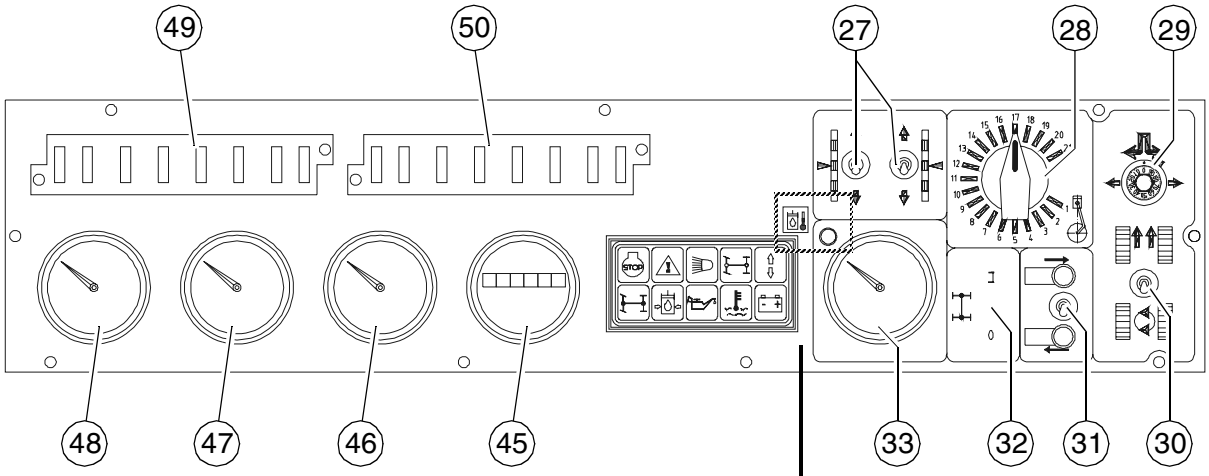

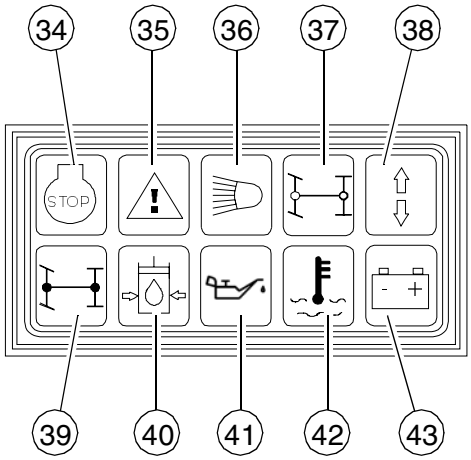

Element3_F6C.cdr, Kontrollleucht_F6.cdr

D F6C.GB 16-50 0504

Item	Designation	Brief description
33	Temperature indicator for hydraulic oil	Normal display up to 85 °C = 185 °F. ⚠ The relevant LED (red) flashes at higher temperatures - stop the paver finisher (drive lever in the centre position), let the engine cool down while idling. Determine the cause and correct it if necessary.
34	Engine stop	Lights up when the engine cannot be started (e.g. because the emergency stop button has been pressed). ☞ In this case, see the section „Malfunctions“.
35	Fault indication from travel drive	A defect in the automatic drive control (signal from RC6-9) is present. ☞ Precise diagnosis involves reading out the fault at BB3. When serious defects occur, e.g. failure of the steering potentiometer, work must be temporarily stopped.
36	not in use	
37	not in use	
38	Traction indicator (green)	Lights up when the drive lever in the drive position. - The engine cannot be started.
39	not in use	

C

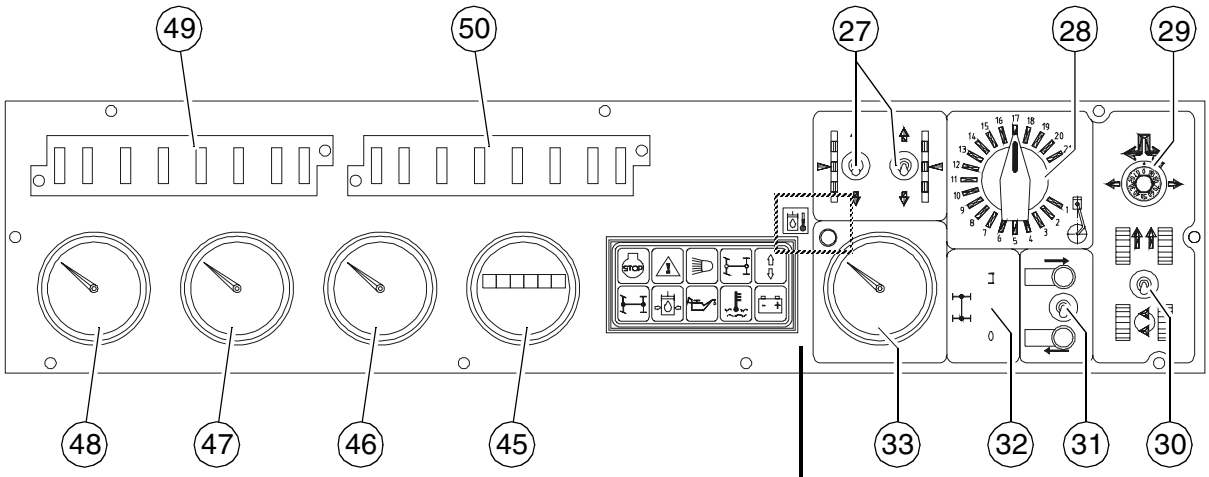

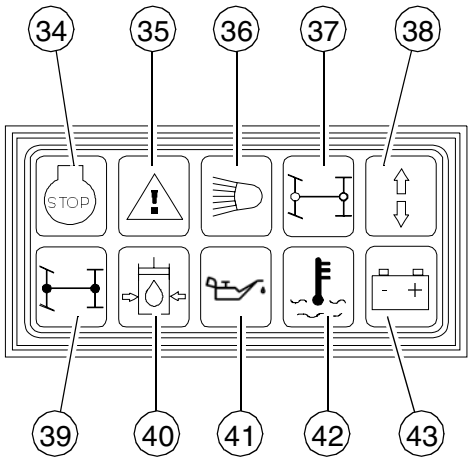

Element3_F6C.cdr, Kontrollleucht_F6.cdr

D F6C.GB 18-50 0504

Item	Designation	Brief description
40	not in use	
41	Oil pressure indicator lamp for the diesel engine (red)	Must extinguish shortly after starting the engine. ⚠ Switch the engine off immediately if the lamp does not go out. For further possible faults, refer to the operating instructions for the engine.
42	Engine temperature indicator (red)	Lights up when the engine temperature is too high. ⚠ Stop the paver finisher (drive lever to the centre position), let the engine cool down while idling. Determine the cause and correct it if necessary (see the section „Malfunctions“). After cooling down to normal temperature, the engine will run with full performance again.
43	Battery charge indicator (red)	Must go out when the engine revs up after the start. - Switch off the engine.
44	not in use	
45	Operating hours counter	Operating hours are only recorded while the engine is running. Heed the maintenance intervals (see chapter F).
46	Fuel gauge	Always heed the fuel gauge. ⚠ Do not completely empty the diesel tank! Otherwise, the entire fuel system must be ventilated.
47	RPM meter (○)	Indicates the engine speed in rpm.
48	Engine temperature	Green area: normal temperature. ⚠ Stop the paver finisher (drive lever in the centre position) when the display is near or in the red area, let the engine cool down while idling. Determine the cause and correct it if necessary (see the section „Malfunctions“).
49	Fuse box I	☞ For the fuse assignment, see chapter F.
50	Fuse box II	☞ For the fuse assignment, see chapter F.

2.2 Remote control

Two remote control units – to the left and to the right of the screed – allow the functions of the respective side of the paver finisher to be controlled.

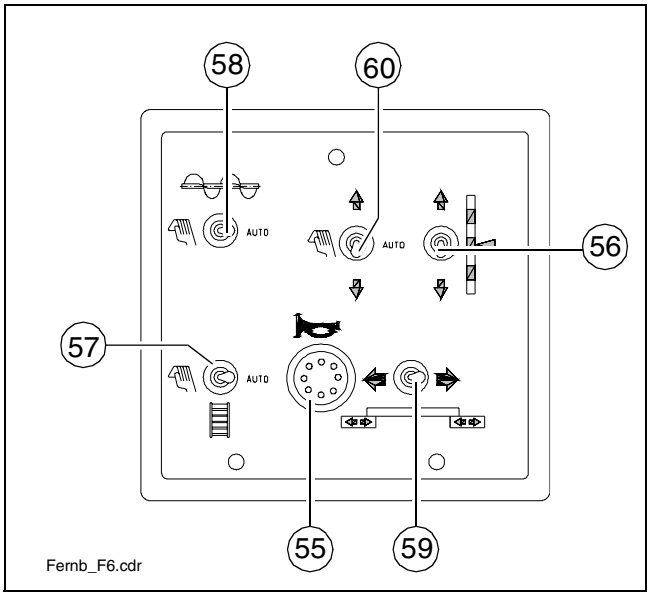

Front

Item	Designation	Brief description
55	Horn	Function as for push-button (13) on the operating panel.
56	Levelling cylinder	Function and application as for switch (27) on the operating panel. - Switch (60) must be set to „manual“.
57	Conveyor	Function and application as for switch (17) on the operating panel.
58	Auger	Function and application as for switch (23) on the operating panel.
59	Extend/retract screed	Used to hydraulically extend or retract the extendable parts of the variable screed.
60	Automatic levelling system	manual: Height adjustment possible with switch (56) (or switch (27) on the operating panel) auto: Automatic height adjustment by means of the grade control unit

Rear

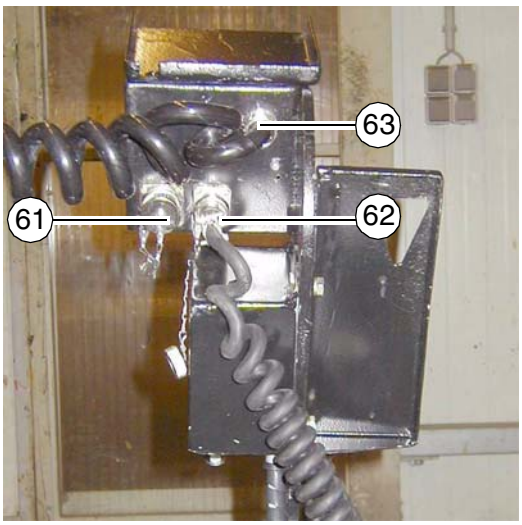

Fernb.Unters_F6.jpg

Item	Designation	Brief description
61	Socket for automatic levelling unit	Connect the cable for the grade control unit here.
62	Socket for auger limit switch	Connect the cable for the material limit switch here.
63	Cable for remote control	Connect to the socket beneath the roof bracket.

Engine speed adjuster (67)

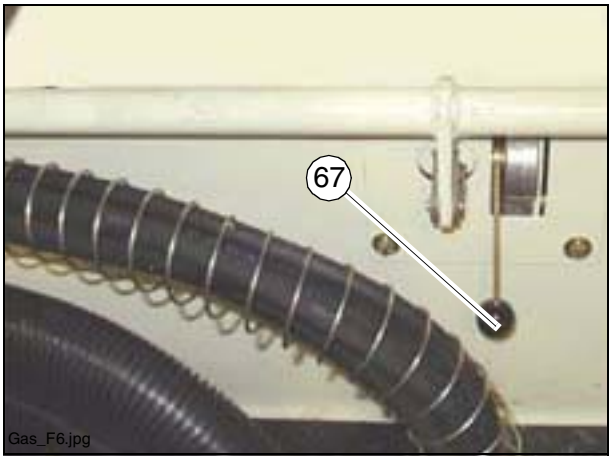

The adjusting lever is located centrally on the centre wall of the control panel.

Use this adjuster to set the desired engine speed.

Setting:
- Pivot the lever up to increase the engine speed.
- Pivot the lever down to reduce the engine speed.

Under normal circumstances, the speed should be set to maximum during paving and should be reduced for transportation!

Batteries (68)

The batteries of the 24 V system are located beneath the covering on the left-hand side.

☞ For the specifications, refer to chapter B, „Technical Data“.
For servicing, see chapter F.

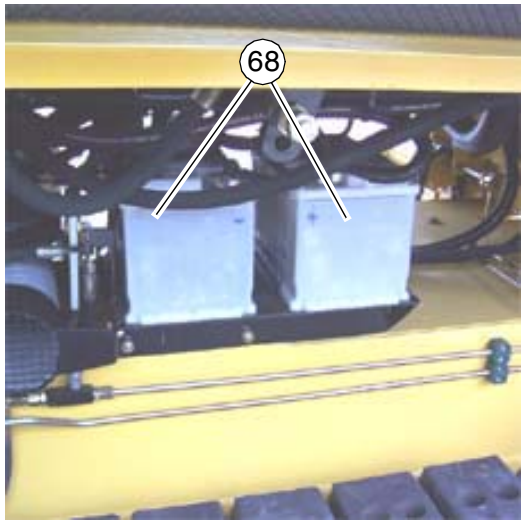

BATTERIE_F6C.jpg

Battery main switch (69)

The main switch is located on the left of the front control panel wall; it isolates the power circuit between the battery and the main fuse.

- In order to switch off, turn the key pin (69) to the left and pull it out.

☞ Do not lose the key pin as the paver finisher can no longer be moved in this case!

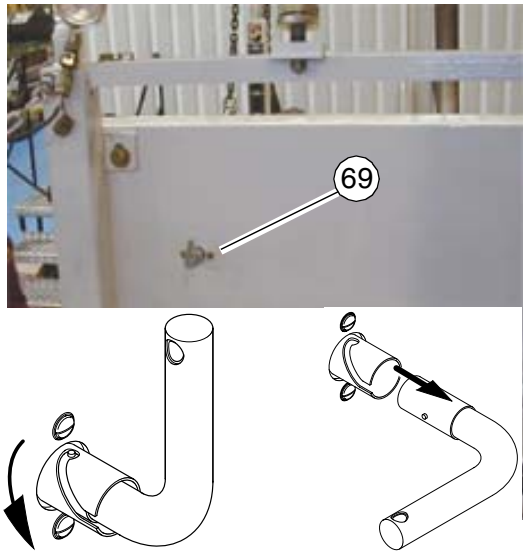

Hauptschalter_F6.jpg

Transport safeguards for the hopper (70)

Before transporting or parking the paver finisher, the hopper halves must be swung upwards and the transport safeguards for the hopper must be inserted.

STOP Do not enter the hopper while the engine is running! Danger of being caught by the conveyor!
Without hopper transport safeguards inserted, the hoppers may slowly open under certain circumstances; danger of accidents during transportation!

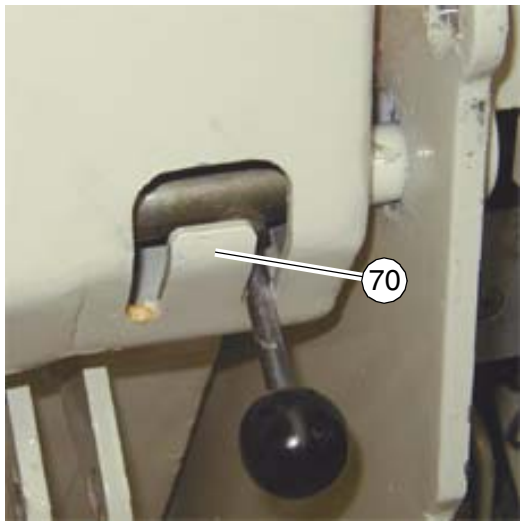

Muldensich_F6.jpg

Conveyor limit switch (paddle) (71)

The conveyors should stop when the material has roughly reached the area below the auger tube.
Each conveyor is equipped with a limit switch, which determines the point at which the conveyor drive is switched off.

Setting the deactivation point:

- Loosen threaded pin (A) and turn the excenter shaft (B) to the desired deactivation point.

- Tighten the threaded pin (A) again to secure the excenter shaft.

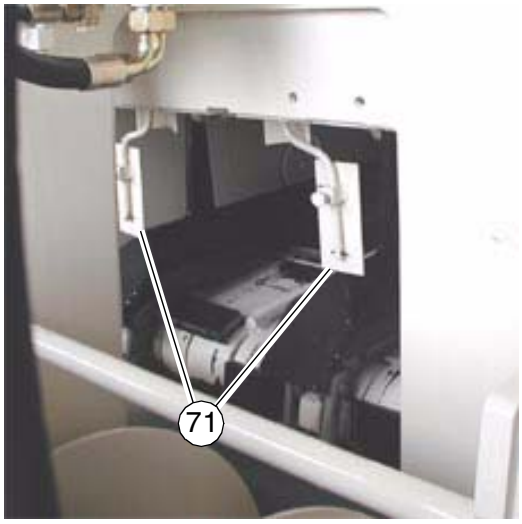

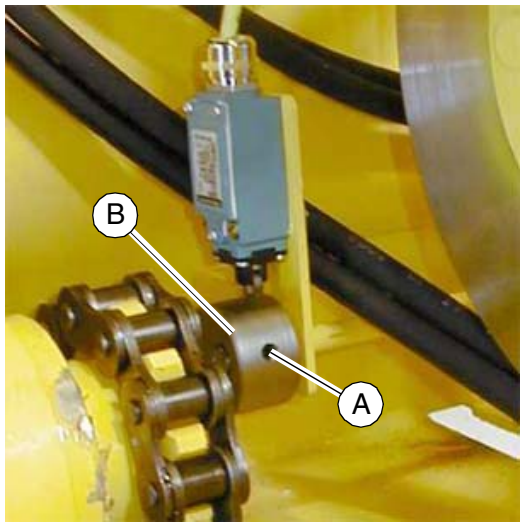

Sensorl_F6.jpg/Sensor2_F6.jpg

Ultrasonic auger limit switch (72)

On each side, the ultrasonic sensor (72) is secured to the side shield using appropriate linkage.
The cables are connected to the remote control units located at the sides of the screed.

Setting the feed volume:

Align the sensor (72) towards the mixed materials in front of the auger. The sound waves should impact on the mixed materials at right angles.
Adjust the deactivation point with the desired material height by regulating the potentiometer (A). The feed speed is automatically regulated depending on the existing material height.

☞ We recommend adjusting the limit switch positions during material distribution.

☞ Always keep sensors free of dirt.

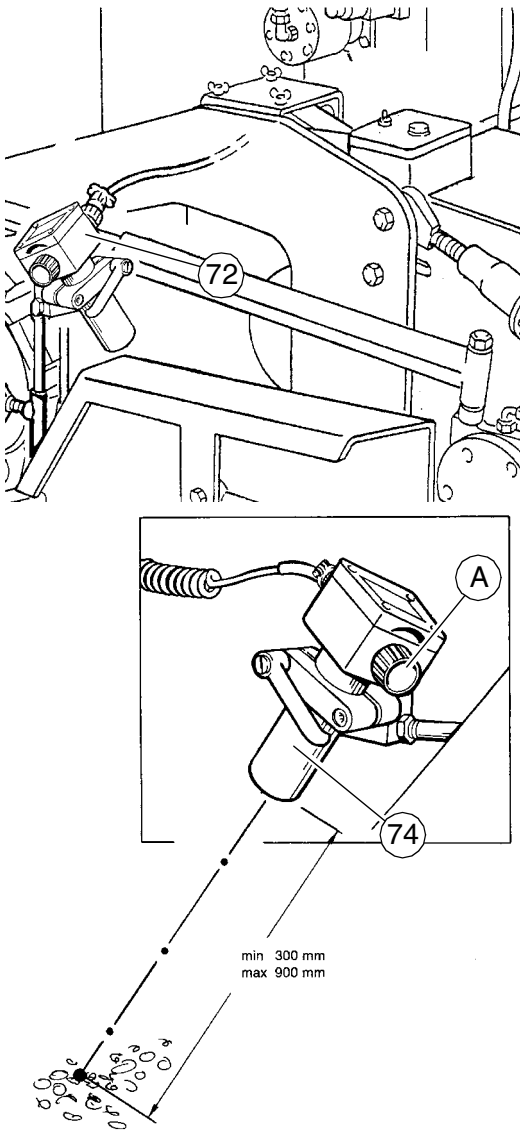

Ultschall.tif

Sockets for working lights (left and right) (73)

Two sockets are located on the rear console. Working lights (24 V) can be connected here.

- Voltage is present when the main switch (69) is switched on.

☞ As an option, one socket can be used to provide power for an electrically heated seat, a rotating beacon or a separating agent system.

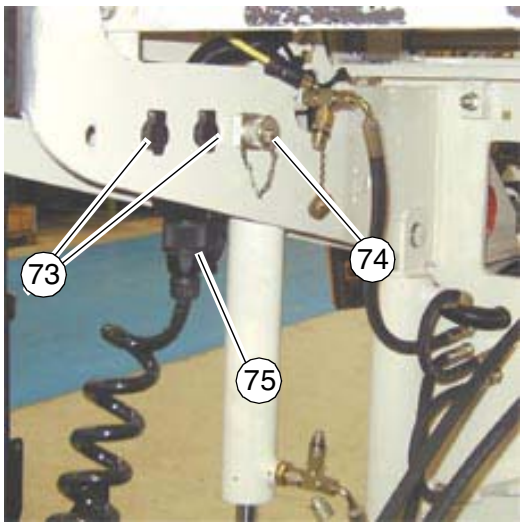

Steckdosen.jpg

Sockets for automatic levelling/slope (74)

One socket is located on each side of the rear console for the automatic levelling system.

- Unscrew dust cap, insert automatic levelling system plug and secure with the plug's threaded cap.

Socket for remote control (75)

One socket is located on each side at the bottom of the rear console for the corresponding remote control.

- Connect the cable of the relevant remote control to socket.

Vibration (76) and tamper (screed-specific) (77) speed control

The speed controllers for the screed tamper and vibration are located at the rear of the paver finisher. Used to continuously set the desired speed (frequency) of the screed movement.

- The speed controller for vibration (76) is located on the railing on the right side of the machine (support of the separating agent system).
- The speed controller for the tamper (77) is located on the railing on the left side of the machine (gas bottle holder).

☞ For the vibration and tamper frequency, see „Technical data“ in the Bohlen-Betriebsanleitung.

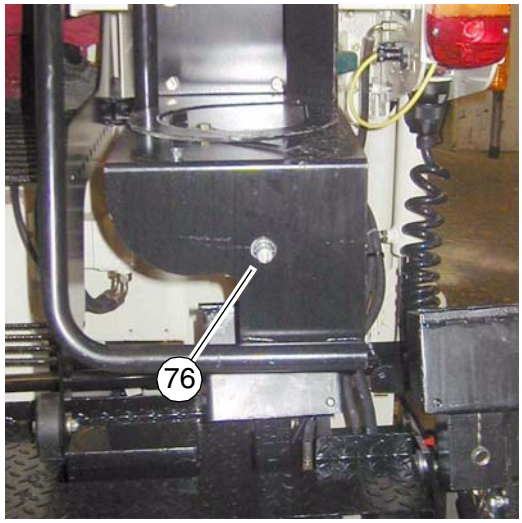

Vibrpm.jpg/Tamprpm.jpg

Emulsion spray system (80), (81)

Used to spray the parts coming into contact with asphalt with a separator emulsion.

Two different variants are available:

A Spray bottle with pressure pump (80)

B Spray facility with electric pump (81) ○

⚠ Only switch on the spraying system when the diesel engine is running; otherwise, the battery will be discharged. Switch off again after use.

STOP Do not spray onto naked flames or hot surfaces! Danger of explosion!

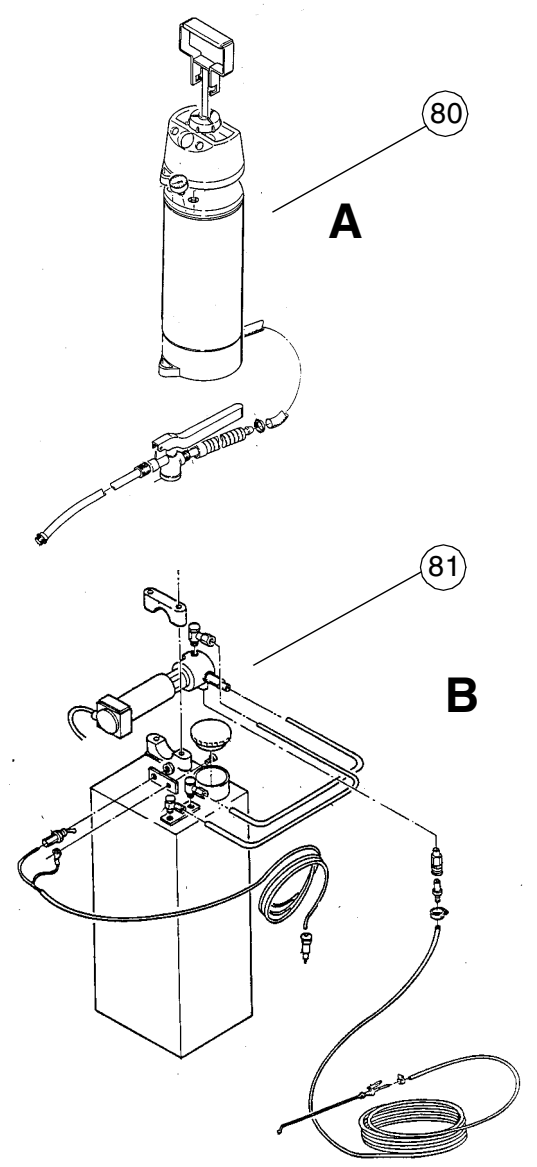

EMUL1.TIF,EMUL2.TIF

Collapsible roof lock (LH and RH on the rear console) (82):

To lower the roof (e.g. during transport on a low bed trailer):

- Release locking bolts (A) on both sides
- Pull roof forwards at the frame
- Allow locking bolt (A) to engage in the second detent bore.

STOP Danger of crushing in the joint areas

BOHLSICH.TIF

Mechanical screed transport safeguard (left and right) (90)

Used to protect the lifted screed from inadvertent lowering. The screed transport safeguard must be inserted before transportation and when work is finished.

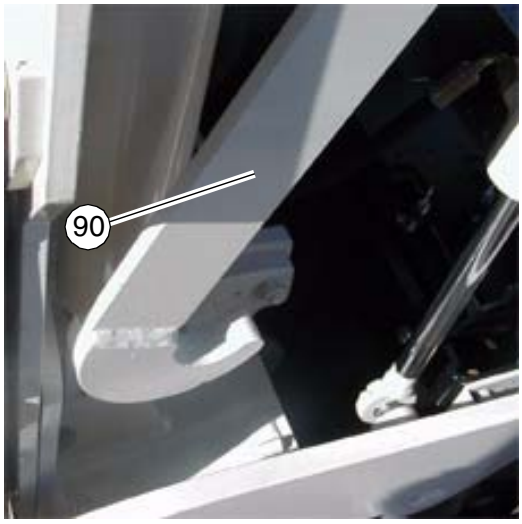

Bohlentransp_F6.jpg

Transportation with an unsecured screed bears the danger of accidents!

- Lift the screed.
- Place hook over retaining journal.
- Lower the screed a little.
- Check that the retaining journals (left and right) lie in the hooks.

Seat lock (behind the driver's seat) (91)

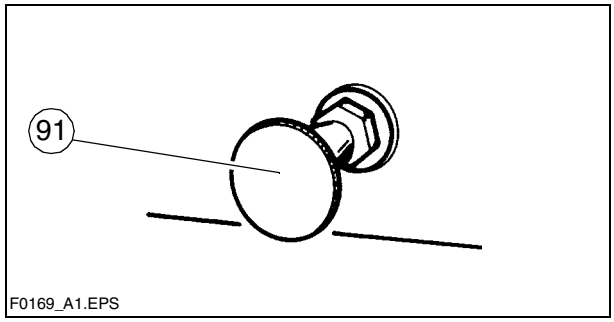

Telescoping seats (option) can be extended out beyond the basic width of the paver finisher. They must be locked (also refer to „Latch for operating panel").

The seats must not protrude from the vehicle during transportation. Push the seats back to the basic width of the paver finisher!

- Pull out the locking button and move the seat; let the locking button engage again.

The driver's seat can move when the locking button is not engaged properly. Danger of accidents during transportation!

3 Operation

3.1 Preparing for operation

Required devices and aids

To avoid delays on site, check before starting work whether or not the following devices and aids are present:

- Wheel loader for transporting heavy extendable parts
- Diesel fuel
- Engine oil and hydraulic oil, lubricants
- Separating agents (emulsion) and manual injector
- A full propane gas bottle (screed with gas heater system)
- Shovel and broom
- Scraper (spatula) for cleaning the auger and the hopper infeed area
- Parts that may become necessary for extending the auger
- Parts that may become necessary for extending the screed
- Percentage spirit level and levelling rail, +4 m long
- Levelling wire
- Protective clothing, signal vest, gloves, ear protection

Before starting work
(in the morning or when starting paving)

- Heed the safety instructions.
- Check the personal protective equipment.
- Take an inspection walk around the paver finisher and check for leaks and damages.
- Install parts removed for transportation or for the night.
- If the screed is optionally operated with a gas heater system, open the bottle valve and the gas heater system's shut-off valve.
- Carry out a check according to the following „Check list for the machine operator".

Check list for the machine operator

Check!	How?
Emergency stop button - on the operating panel	Push in the button. The diesel engine and all running drives must stop immediately.
Steering	The paver finisher must immediately follow every steering wheel movement in a precise manner. Check straight running.
Horn - on the operating panel - on both remote controls	Briefly press the horn button. The horn must sound.
Lighting	Switch on with the ignition key, walk around the paver finisher to check and switch off again.
Screed hazard flasher (with vario screeds)	With the ignition switched on, press the switches for extending/retracting the screed parts. The warning lamps must flash.
Gas heater system (○): - Bottle holder - Bottle valve - Pressure reducer - Hose rupture protection - Closing valves (burners) - Main shut-off valve - Connections - Indicator lamps of the switch box	Check: - Secure seat - Cleanliness and tightness - Working pressure 1.5 bar - Function - Function - Function - Tightness - All lamps must light up when the system is switched on
Screed covers and walkways	Hinged walkway plates must be swung down. Check that the side shields, the side plates and the covers are securely seated.
Screed transport safeguard	When the screed is raised, the transport safeguards beneath the lifting cylinder retaining bolts must be able to pivot.
Hopper transport safeguard	When the hopper is closed, it must be possible to push the bolts into the relevant bores in the vehicle frame.
Protective roof	The locking bolts on both sides must be located in the intended bore.
Miscellaneous: - Engine hoods - Side flaps	Check that the hoods and flaps are securely seated.

3.2 Starting the paver finisher

Before starting the paver finisher

Before starting the diesel engine and beginning operation, the following steps must be performed:

- Daily maintenance of the paver finisher (see chapter F)

⚠ Check the operating hour counter to determine whether or not additional maintenance work (e.g. monthly or annual maintenance) must be performed.

- Check the safety devices and protective devices.

„Normal“ starting

Set the drive lever (1) to the centre position and the speed adjuster (2) to minimum.

- Turn the ignition key (3) to position „1“. The lights should be switched off during starting to reduce the current drain on the battery.

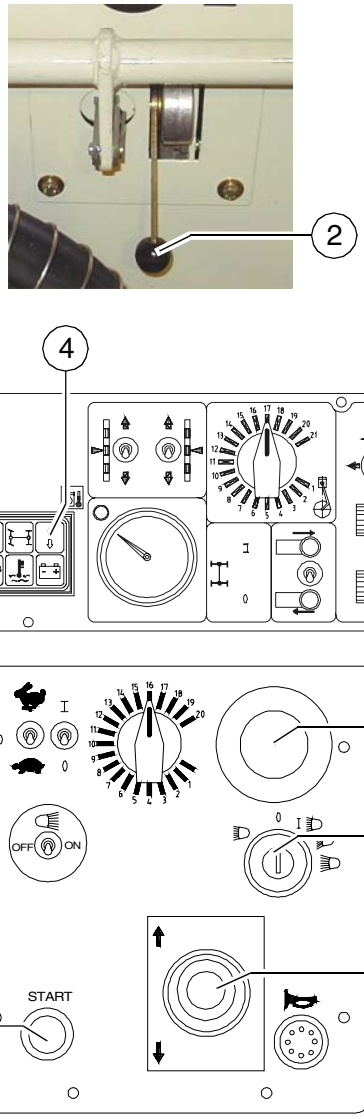

Element2_F6C.cdr,Element3a_F6C.cdr,

☞ Starting is impossible when the traction indicator lamp is lit (4) (drive lever (1) not in central position) or the engine stop indicator (5) is active (emergency stop button (6) is pressed, auger or conveyor switch is switched on).

- Press the starter button (7) to start the engine. Do not let the starter run permanently for more than 10 seconds; allow for a break of 1minute after every attempt!

External starting (starting aid)

☞ The engine can be started with the help of an external power source if the batteries are empty and the starter no longer turns.

Suitable power sources are:

- Other vehicles with a 24 V system;
- 24 V auxiliary battery;
- Start device that is suitable for external starting with 24 V/90 A.

⚠ Standard chargers or quick chargers cannot be used for external starting.

To externally start the engine:

- Set the drive lever (1) to the centre position and the speed adjuster (2) to minimum.
- Turn the ignition key (3) to position „1“ to switch on the ignition.
- Use appropriate cables to connect the external power source.

⚠ Observe the polarity! Always connect the negative cable last and disconnect it first!

- Press the starter (4) to start the engine. Do not let the starter run permanently for more than 10 seconds; allow for a break of 1minute after every attempt!

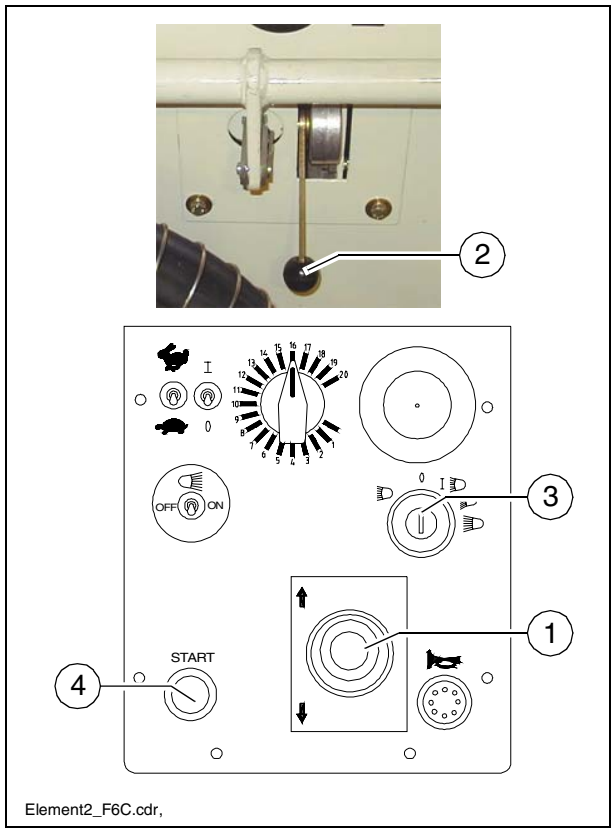

After starting

To increase the engine speed:

- Set up engine speed adjuster (1) to medium speed.

⚠ Let the paver finisher warm up for approx. 5 minutes if the engine is cold.

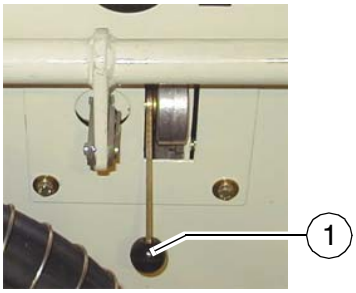

Gas2_F6.jpg

Indicator lamps

The following indicator lamps must be observed under all circumstances:

Oil pressure indicator lamp for the diesel engine (1)

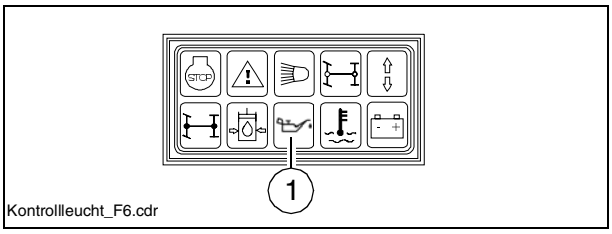

- Must go out right after the engine has been started.

⚠ If the lamp does not go out or lights up during operation: Pull out the ignition key immediately to switch off the engine. Check the engine oil level.

For further possible faults, refer to the operating instructions for the engine.

Battery charge indicator (2)

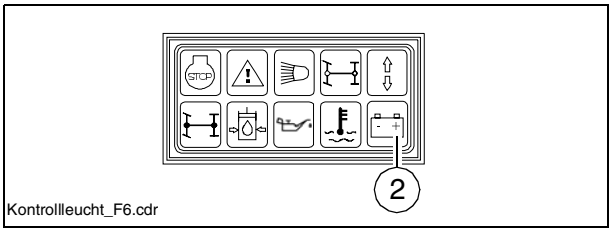

Must go out when the engine revs up after the start.

⚠ If the lamp does not go out or lights up during operation: Briefly rev up the engine.
Switch off the engine and determine the cause for the malfunction if the lamp does not go out.

⚠ For further possible malfunctions, refer to the section „Malfunctions“.

3.3 Preparations for paving

Separating agent

Spray the parts coming into contact with asphalt (hopper, screed, auger, push roller) with a separator emulsion.

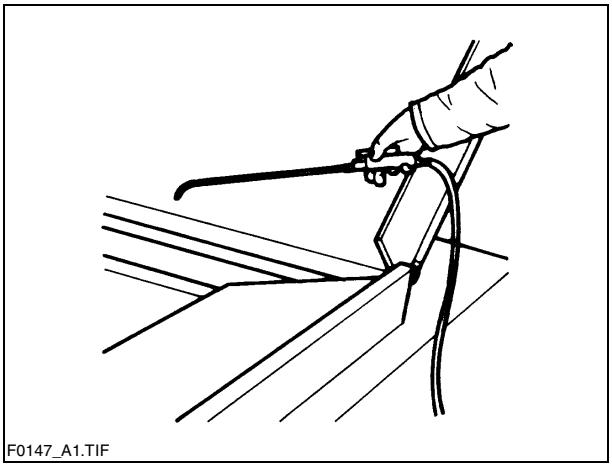
F0147_A1.TIF

⚠ Do not use diesel fuel as it dissolves the bitumen (prohibited in Germany!).

Screed heater system

Switch on the screed heater approx. 15–30 minutes (depending on the ambient temperature) before paving begins. Warming up prevents the material from sticking to the screed plates.

Direction marks

To ensure straight paving, a direction mark must be present or established (road edge, chalk lines or similar).

- Slide the operating panel to the desired side and secure it.
- Swivel out and adjust the direction indicator.

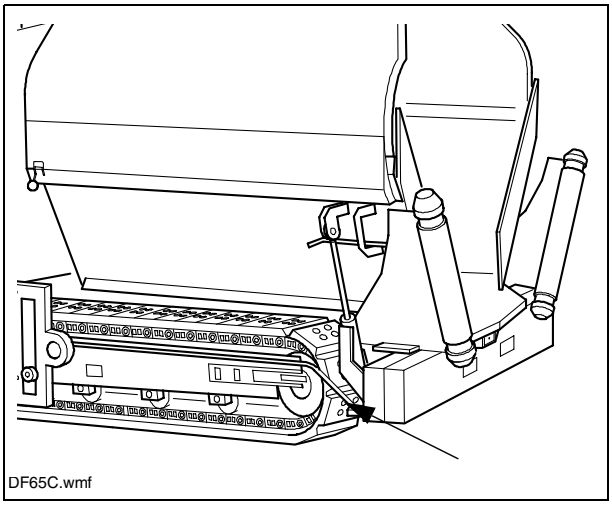
DF65C.wmf

Loading/distributing material

- Use switch (1) to open the hopper. Instruct the truck driver to dump the material.
- Set the switches for the auger (2) and the conveyor (3) to „auto“.
- Set the switches for the auger and the conveyor on the remote controls (if applicable) to „auto“.

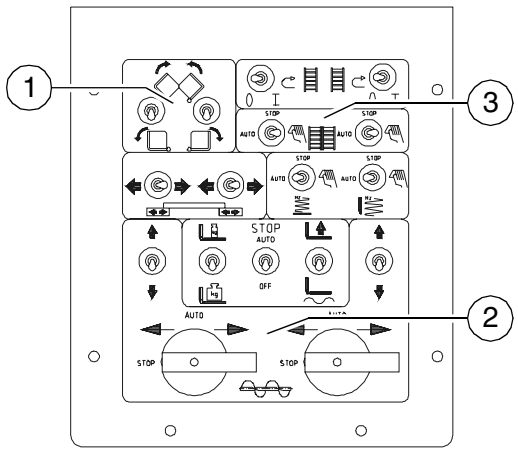

Element2_F6W.cdr

- Switch the conveyors on.
  The limit switches for the conveyors (4) must switch off when the material has approximately reached the area beneath the auger crossbeam.
- If necessary, carry out setting at the eccentric shafts (5)
- Check that the material is conveyed properly.
  Manually switch on or off the conveyor if the material is not conveyed properly until a sufficient amount of material lies in front of the screed.

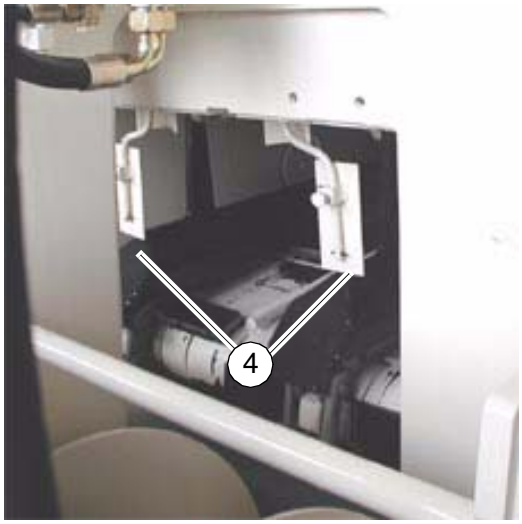

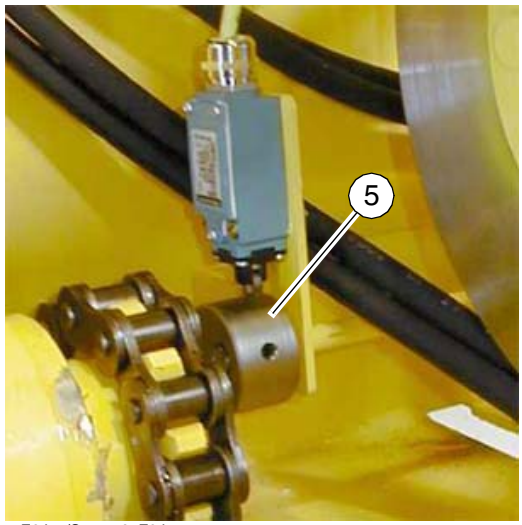

Sensor_F6.jpg/Sensor2_F6.jpg

3.4 Driving off for laying

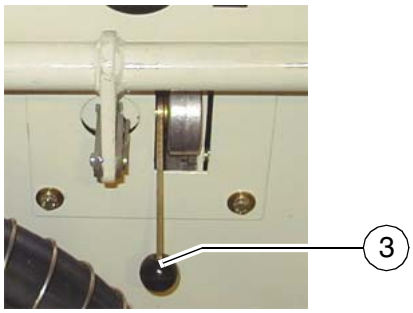

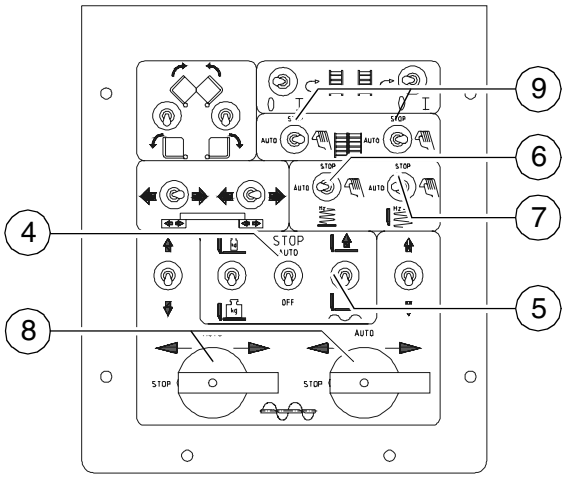

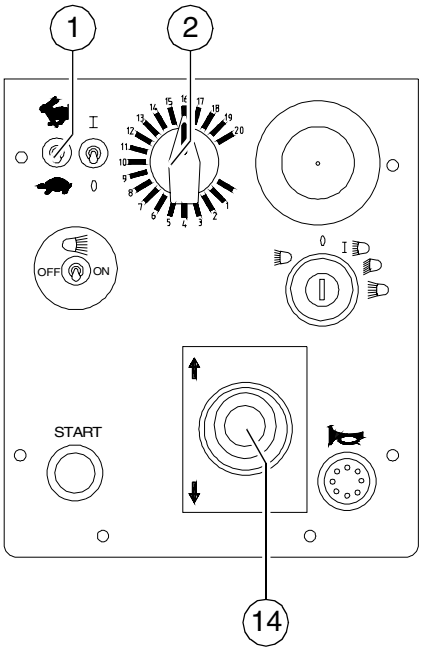

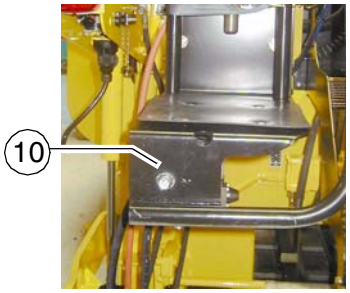

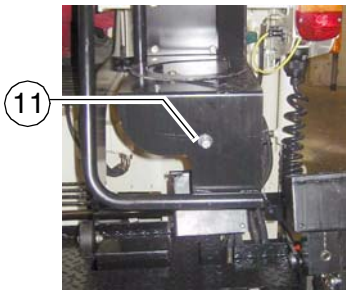

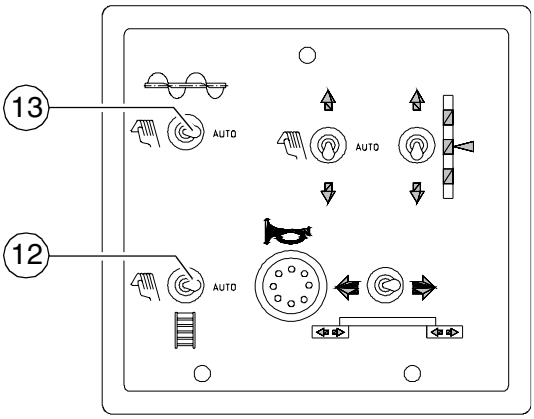

Element1_F.cdr, Element2_F6C.cdr,Tamprev.cdr,Vibrev.cdr

Set the switches, levers and controls listed below to the specified positions when the screed has reached its operating temperature and a sufficient amount of material lies in front of the screed:

Item	Switch	Position
1	Traction drive speed - fast/slow	slow (“Tortoise”)
2	Traction drive preselector	depending on installation situation
3	Engine speed	Maximum
4	Screed stop	auto
5	Screed position	Floating position
6	Vibration	auto
7	Tamper	auto
8	Auger left/right	auto
9	Conveyor left/right	auto
10	Speed regulator, tamper (○)	depending on installation situation
11	Speed regulation for vibration	depending on installation situation
12	Conveyor (remote control)	auto
13	Auger (remote control)	auto

- Push the drive lever (14) all the way to the front and start driving.
- Observe the distribution of the material and adjust the limit switches if necessary.
- Set the compacting elements (tamper and/or vibration) according to the required compaction ratio.
- Let the paving master check the layer thickness after 5–6 meters and correct if necessary.

Carry out the check in the area of the drive chains or wheels as the screed tends to level an uneven ground. The reference points for the layer thickness are the drive chains or wheels.

The basic setting of the screed must be corrected if the actual paving height deviates significantly from the values indicated by the scales (see screed operating instructions).

☞ The basic setting is for asphalt material.

3.5 Checks during paving

The following points must be constantly observed during paving:

Paver function

- Screed heater system
- Tamper and vibration
- Engine oil and hydraulic oil temperature
- The screed parts must be retracted and extended in time when obstacles are in the way
- Uniform material transport and distribution or supply to the screed; may require corrections to settings of the material switches for conveyor and auger.

☞ Refer to section „Malfunctions“ in the case of defective paver functions.

Quality of the layer

- Paving height
- Slope
- Evenness in the driving direction and at right angles to it (check with 4 m levelling rod)
- Surface structure/texture behind the screed.

☞ See the section „Malfunctions“ when the paving quality is poor.

3.6 Paving with screed stop

General

The screed hydraulics can be influenced to achieve optimum paving results:

Deactivation of floating position

The „floating position deactivation“ function can be used to block the screed hydraulics to prevent the screed from lowering when the paver finisher stops during paving.

Switch (1) has the following positions:

A: Automatic screed stop when the drive
lever is in the centre position
C: Switched off

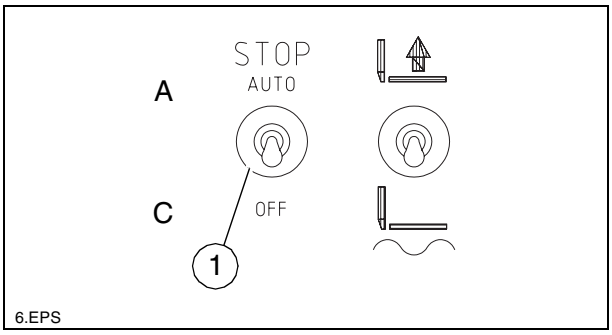

☞ Use position (C) for setting up the paver finisher and position (A) for paving.

3.7 Interrupting/terminating operation

During breaks (e.g. delays caused by material trucks)

- Determine the approximate duration.
- When material cooling to below the minimum paving temperature is to be expected, run the paver finisher empty and create an edge like the end of a layer.
- Set the drive lever (1) to the centre position.

During longer breaks
(e.g. lunch break)

- Set the drive lever (1) to the centre position and the speed adjuster (2) to minimum.
- Switch off the ignition (3).
- Switch the screed heater system off.
- If the screed is optionally operated with a gas heater system, close the bottle valve.

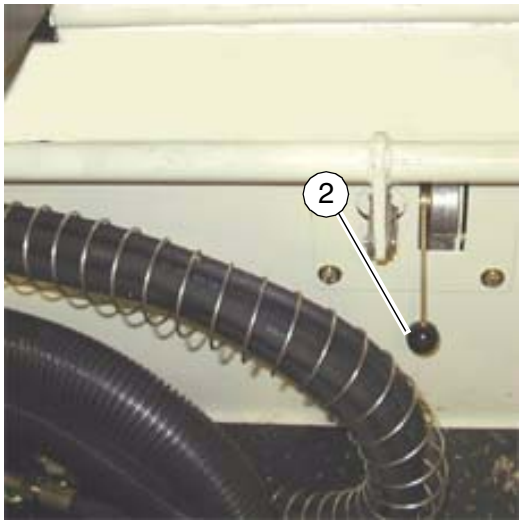

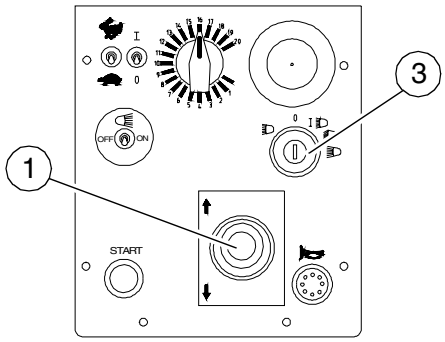

Gas_F6C.jpgElemenrt2_F6C.cdr

☞ The screed must be heated up to the correct paving temperature before paving my be restarted.

When work is finished

- Run the paver finisher empty and stop it.
- Lift the screed: Move switch (1) to the upper position and set switch (2) to raise.
- Retract the screed parts to the basic screed width and lift the auger. Where applicable, completely extend the levelling cylinders.

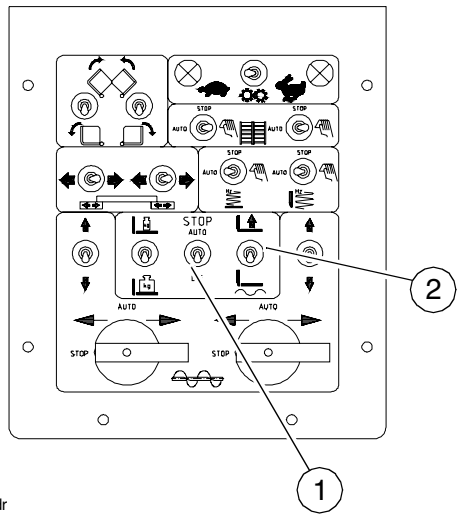

Elemenrt1.cdr

- Engage the screed transport safeguards (3).
  - While operating the tampers at a low speed, let any material residues drop out.

F0083_A1.TIF

- Set the drive lever (4) to the centre position and the speed adjuster (5) to minimum.
- Switch off the ignition (6).
- Switch the screed heater system off.
- If the screed is optionally operated with a gas heater system, close the main shut-off valve and the bottle valve.
- Remove the levelling units and stow them away in the boxes; close flaps.
- Remove all parts that extend beyond the paver finisher contour or secure them if the paver finisher is to be transported over public roads on a low-bed trailer.

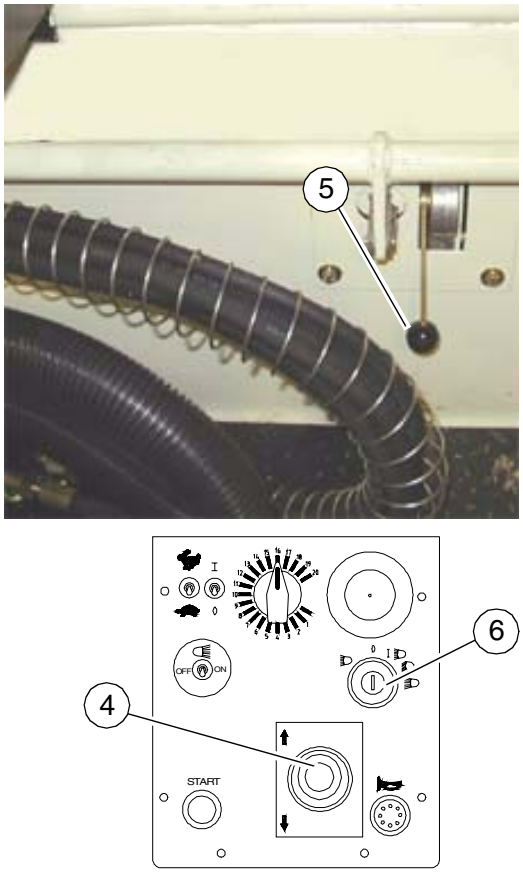

Gas_F6C.jpg,Elemenrt2_F6c.cdr

- Check the operating hour meter (7) to determine whether maintenance work must be performed (see chapter F).
- Cover and lock the operating panel.
- Remove material residues from the screed and the paver finisher and spray all parts with separator fluid.

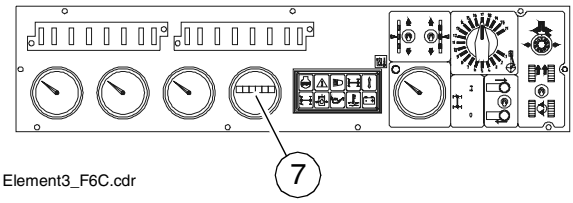

Element3_F6C.cdr

4 Malfunctions

4.1 Problems during paving

Problem	Cause
Wavy surface („short waves“)	- change in the material temperature, demixing - wrong material composition - incorrect operation of the roller - incorrectly prepared foundation - long standstill times between loads - grade control reference line is not suitable - grade control jumps to the reference line - grade control toggles between up and down (inertia setting is too high) - bottom plates of the screed are loose - bottom plates of the screed are warped or not uniformly worn - screed is not operated in the float position - too much play in the mechanical screed link/suspension - paver finisher speed is too high - augers are overloaded - changing material pressure against the screed
Wavy surface („long waves“)	- change in the material temperature - demixing - roller has stopped on the hot material - roller has turned or roller speed has been changed too fast - incorrect operation of the roller - incorrectly prepared foundation - truck brake is applied too tight - long standstill times between loads - grade control reference line is not suitable - incorrect installation of the grade control - limit switch is not correctly set - screed is empty - screed has not been switched to the floating position - too much play in the mechanical screed link - auger is set too deep - auger is overloaded - changing material pressure against the screed
Cracks in the layer (over the entire width)	- material temperature is too low - change in the material temperature - moisture on the foundation - demixing - wrong material composition - wrong layer height for maximum grain size - cold screed - bottom plates of the screed are worn or warped - paver finisher speed is too high

Problem	Cause
Cracks in the layer (centre strip)	- material temperature - cold screed - bottom plates are worn or warped - wrong crowning
Cracks in the layer (outer strip)	- material temperature - screed extendable parts are incorrectly installed - limit switch is not correctly set - cold screed - bottom plates are worn or warped - paver finisher speed is too high
Layer composition is not uniform	- material temperature - change in the material temperature - moisture on the foundation - demixing - wrong material composition - incorrectly prepared foundation - wrong layer height for maximum grain size - long standstill times between loads - vibration is too slow - screed extendable parts are incorrectly installed - cold screed - bottom plates are worn or warped - Screed is not operated in the float position - paver finisher speed is too high - auger is overloaded - changing material pressure against the screed
Marks in the surface	- truck hits too much against the finisher while aligning to the finisher - too much play in the mechanical screed link/suspension - truck brake is applied - vibration is too high while standing on a spot
Screed does not react to corrective measures as expected	- material temperature - change in the material temperature - wrong layer height for maximum grain size - incorrect installation of the grade control - vibration is too slow - Screed is not operated in the float position - too much play in the mechanical screed link - paver finisher speed is too high

4.2 Paver finisher malfunctions

Malfunction	Cause	Remedy
At the diesel engine	Diverse	See operating instructions for the engine
Diesel engine does not start	Batteries empty	See „External starting“ (start assistance)
	Diverse	see „Towing“
Tamper or vibration is not functioning	Tamper is obstructed by cold bitumen	Properly heat the screed
	Hydraulic oil level in the tank is too low	Top up the oil
	Pressure limiting valve is defective	Replace the valve; if necessary, repair and adjust the valve
	Oil filter is soiled	Clean the filter; if necessary, replace the filter
Conveyor or augers run too slowly	Hydraulic oil level in the tank is too low	Top up the oil
	Power supply interrupted	Check fuses and cables; replace if necessary
	Switch is defective	Replace the switch
	One of the pressure limiting valves is defective	Repair or exchange the valves
	Limit switch does not switch or regulate correctly	Check the switch; replace and adjust the switch if necessary
	Pump is defective	Replace the pump
	Oil filter is soiled	Replace the filter
Hopper cannot be swung open	Engine speed is too low	Increase the speed
	Hydraulic oil level is too low	Top up the oil
	Leaking seals of the hydraulic cylinder	Replace
	Control valve is defective	Replace
	Power supply interrupted	Check fuses and cables; replace if necessary

Malfunction	Cause	Remedy
Hoppers lowers inadvertently	Control valve is defective	Replace
	Leaking seals of the hydraulic cylinder	Replace
Screed cannot be lifted	Oil pressure too low	Increase the oil pressure
	Leaking seal	Replace
	Power supply interrupted	Check fuses and cables; replace if necessary
Crossbeams cannot be lifted or lowered	Switch on the remote control is set to „auto“	Set the switch to „manual“
	Power supply interrupted	Check fuses and cables; replace if necessary
	Switch on the operating panel defective	Replace
	Excess pressure valve defective	Replace
	Flow rate regulator defective	Replace
	Seals defective	Replace
Crossbeams lower inadvertently	Control valves defective	Replace
	Pilot-controlled non-return valves defective	Replace
	Seals defective	Replace

Malfunction	Cause	Remedy
Traction does not work	Traction drive fuse defective	Replace (Fuse holder on the operating panel)
	Power supply interrupted	Check potentiometer, cables, connectors; replace if necessary
	Traction drive monitoring (type-specific) defective	Replace
	Electro-hydraulic servo unit of the pump defective	Replace the servo unit
	Insufficient supply pressure	Check the suction filter; replace the supply pump and the filter if necessary
Irregular engine speed, engine stop function does not work	Fuel level too low	Check the fuel level; refill fuel if necessary

E Set-up and modification

1 Special notes on safety

Danger to personnel by inadvertent starting of the engine, the traction drive, the conveyor, the auger, the screed or the lifting units.
Unless otherwise specified, work may only be performed when the engine is at a standstill!

- To protect the paver finisher against inadvertent starting:
  Set the drive lever to the centre position and set the preselector to zero; if applicable, remove the drive traction fuse from the operating panel; pull out the ignition key and the main battery switch.
- Protect raised machine parts (e.g. screed or hopper) against lowering by means of mechanical safeguards.
- Replace spare parts, or have them replaced, properly.

When connecting or disconnecting hydraulic hoses and when working on the hydraulic system, hot hydraulic fluid may spurt out at high pressure.
Switch off the engine and depressurise the hydraulic system! Protect your eyes!

- Properly re-install all protective devices before re-commissioning the paver finisher.
- The walking platform must always reach over the entire width of the screed.
  The hinged walkway (option for all variable screeds) may only be swung up under the following circumstances:
- When paving next to a wall or a similar obstacle.
- During transportation on a low-bed trailer.

2 Distribution auger

2.1 Height adjustment

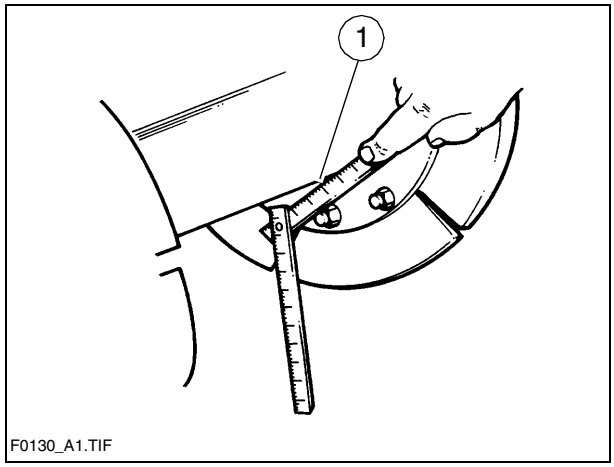

Depending on the material, the height of the distribution auger (1) – measured from its lower edge – should be at least 50 mm (2 inches) above the height of the material layer.

Example: Layer height 10 cm
Adjustment: 15 cm from the ground

An incorrect height adjustment can result in the following problems:

- Auger too high:
  Too much material in front of the screed; material overflow. When operating with larger widths, demixing and traction problems may occur.
- Auger too low:
  Not enough material that can be precompacted by the auger. Irregularities resulting from this cannot be completely compensated for by the screed (wavy surface).
  In addition, increased auger segment wear occurs.

2.2 Mechanical adjustment with ratchet

- Set the ratchet direction lever to the clockwise or anticlockwise direction. Turning anticlockwise lowers the auger, turning clockwise lifts the auger.
- Set the desired height by alternatingly adjusting the right-hand and the left-hand side.
- The current height can be read off from the relevant scale (2) in cm.

Schneckenratsch_F6.jpg

2.3 Hydraulic adjustment (○)

- Determine the currently set height of the auger crossbeam (left and right) by means of the scale (2).
- Push or pull the switches (3) on the operating panel to retract or extend the hydraulic cylinders.

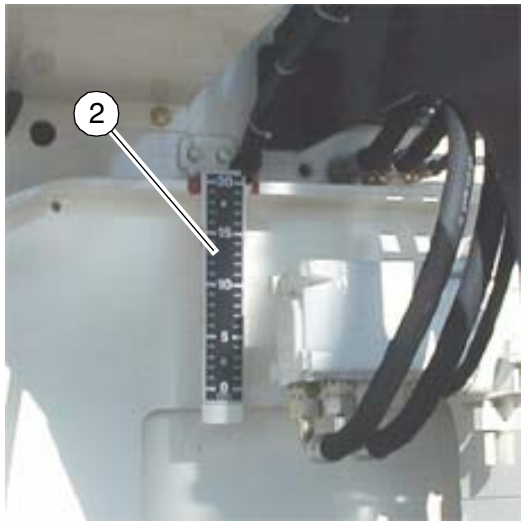

Schneckenskala_F6.jpg

⚠ Actuate both switches simultaneously to avoid auger crossbeam warping.

- Check whether the heights on the left and on the right are identical.

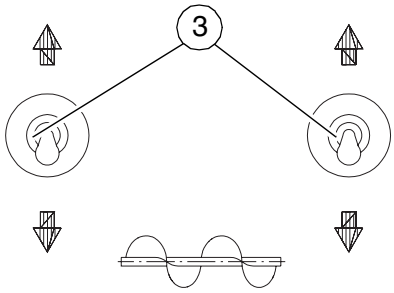

7.eps

2.4 Auger extension

Depending on the type of screed, the most diverse working widths can be reached.

☞ Auger and screed extension must match.
Refer to the appropriate chapter „Set-up and modification“ in the Bohlen-Betriebsanleitung:
– Screed extension chart,
– Auger extension chart.

To attain the desired working width, the corresponding screed extensions, augers, tunnel plates or cut-off shoes must be mounted.

For widths of more than 3.00 m, the auger should be fitted with extension parts on both sides to improve material distribution and to reduce the wear.

STOP The diesel engine must be switched off whenever work is performed on the auger. Danger of injuries!

3 Screed

☞ The operating instructions for the screed cover all work required for mounting, setting up and extending the screed.

4 Electrical connections

Establish the following connections when the mechanical components have been mounted and set up:

4.1 Connect remote controls

- at the socket (17) (on the left and right beneath the rear console).

4.2 Connect levelling system

- Connect the socket (on the left/right of the rear console) for the automatic levelling system/handset here if control is to be carried out via the controller.

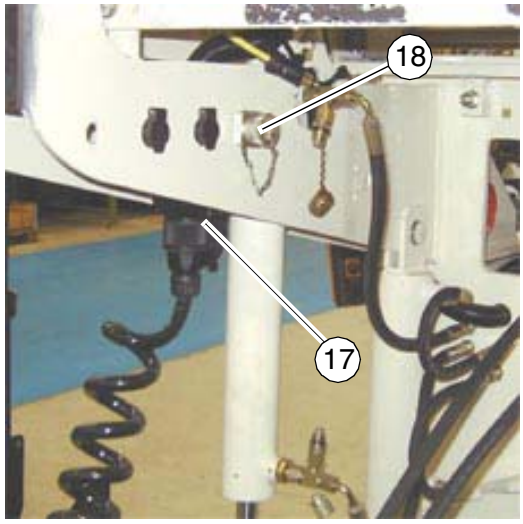

B0092A1.pic

4.3 Connect auger limit switches

- to socket (19)
  (left/right on remote control)

4.4 Connect levelling device

- at the socket (20) (on the left/right on the remote control).

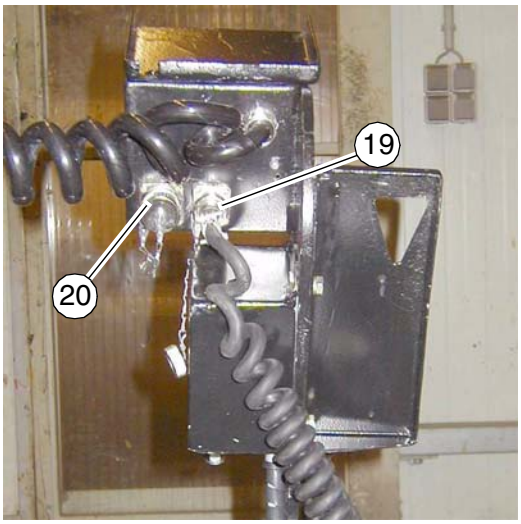

F0119_A1.TIF

4.5 Connect working lights

- to sockets (21) (on the paver finisher).

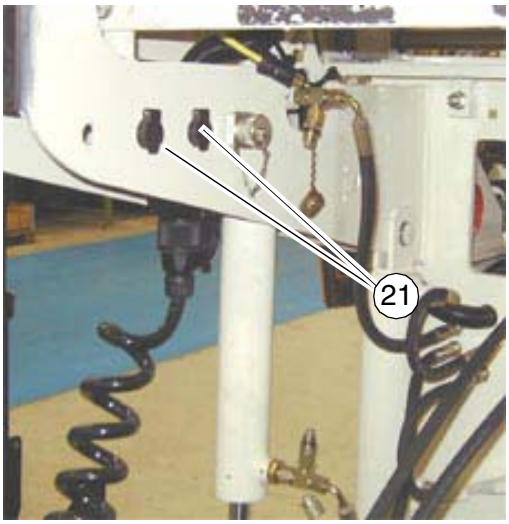

Steckdosen_F6.jpg

F Maintenance

1 Notes regarding safety

Maintenance work: Maintenance work may only be carried out when the engine is at a standstill.

Secure the paver finisher and the attachments against inadvertent starting before beginning any maintenance work:
- Set the drive lever to the centre position and the speed preselector to zero.
- Remove the traction drive fuse from the operating panel.
- Remove the ignition key and the main battery switch.

Lifting and jacking up: Secure lifted machine parts (e.g. screed or hopper) against lowering by means of mechanical supports.

Spare parts: Use only approved parts and install them according to the specifications! If in doubt, contact the manufacturer!

Re-commissioning: Mount all protective devices before re-commissioning the paver finisher.

Cleaning: Cleaning must not be carried out while the engine is running.
Do not use any inflammable substances (such as petrol).
Avoid directly cleaning electrical parts and insulation material with a steam jet; cover them up beforehand.

Working in enclosed environments: Exhaust fumes must be conducted into the open air. Propane gas bottles must not be stored in enclosed rooms.

⚠ In addition to these maintenance instructions, the maintenance instructions issued by the engine manufacturer must be adhered to under all circumstances. All further maintenance work and intervals listed in these are additionally binding.

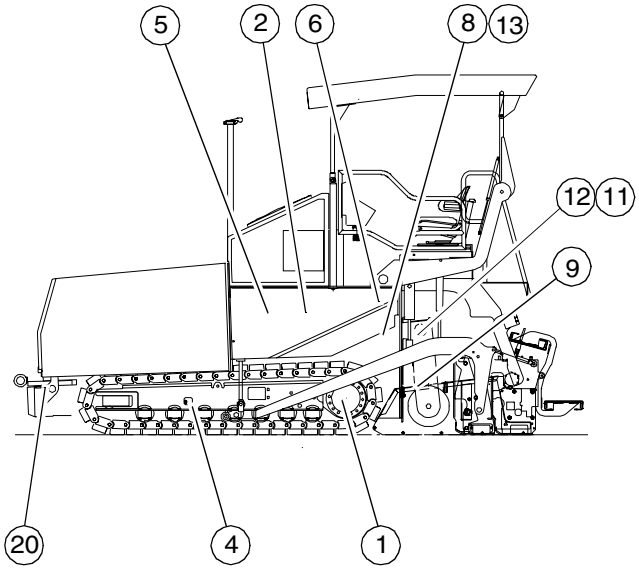
5
2
6
8
13
12
11
9
20
4
1

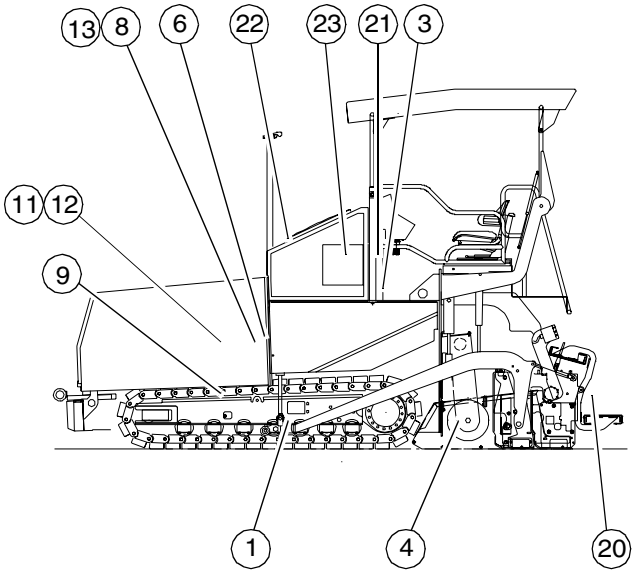
13
8
6
22
23
21
3
11
12
9
1
4
20

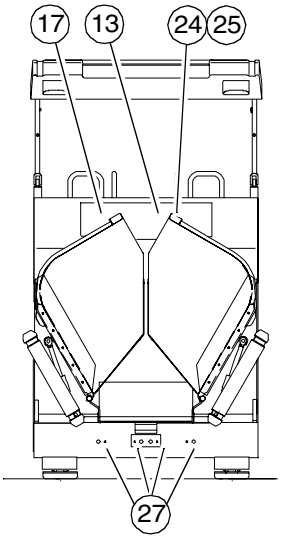
17
13
24
25
27

2.1 Daily (or every 10 operating hours)

Item	Maintenance point	Quantity	Lubrication	Check	(Oil) change	Operating material	Amount
4	Chain tension - conveyor	2		x			
6	High-pressure hydraulic filter (Number according to equipment)	4/ 5		x			
8	Chain tension, conveyor drive	2		x			
9	Auger - outer bearing	2	x			Grease	5 squirts
17	Diesel engine - oil level	1		x		Engine oil	
20	Conveyor deflection roller	2	x			Grease	5 squirts
22	Filling level, fuel tank	1		x		Diesel fuel	see „Filling volumes“
25	Hydraulic oil reservoir, filling level	1		x		Hydraulic oil	see „Filling volumes“
27	Chain tension - conveyor	2		x			
	General safety check: see section 3.1.						
	Safety check						

⚠ Check the oil level twice a day during the run-in period of the diesel engine! When work has been performed on the hydraulic system: check all filters after 20 operating hours and replace them where applicable!

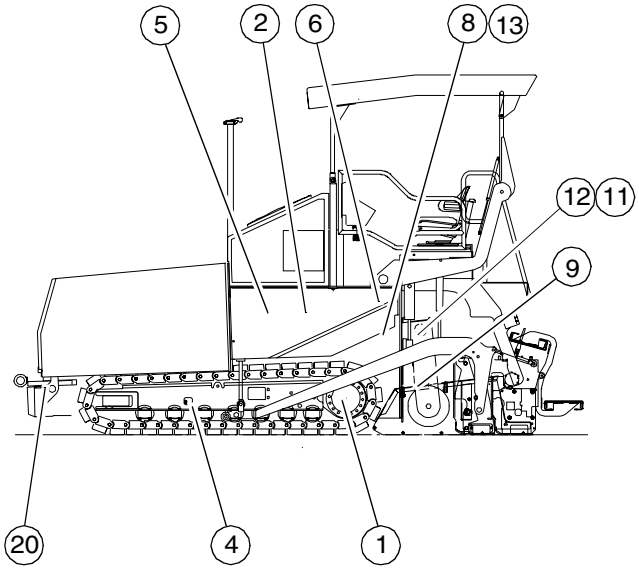

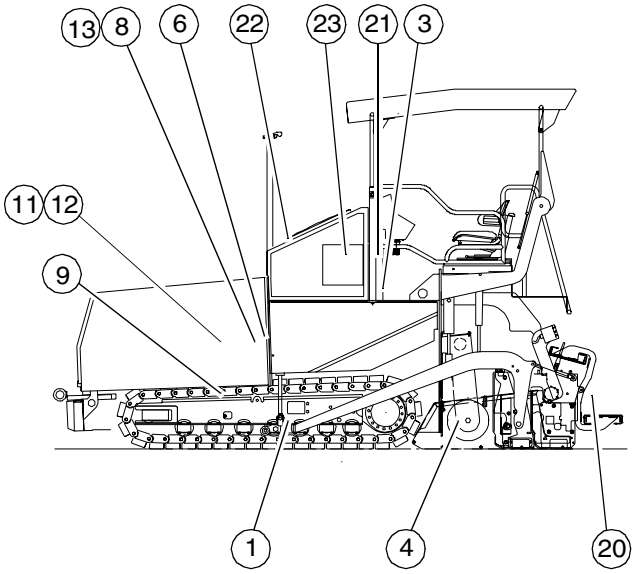

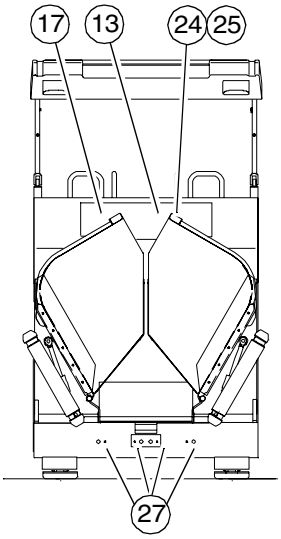

F F6C.GB 4-30 0504

2.2 Weekly (or every 50 operating hours)

Item	Maintenance point	Quantity	Lubrication	Check	(Oil) change	Operating material	Amount
1	Planetary gear conveyor	2		x		Gear oil 220	see „Filling volumes“
2	Batteries: - Acid level - Terminals and cables	2		x			
3	Air filter	1		x			
5	Pump distributor gear	1		x			
12	Auger drive chains	2		x			
13	Conveyor drive	2	x			Grease	5 squirts

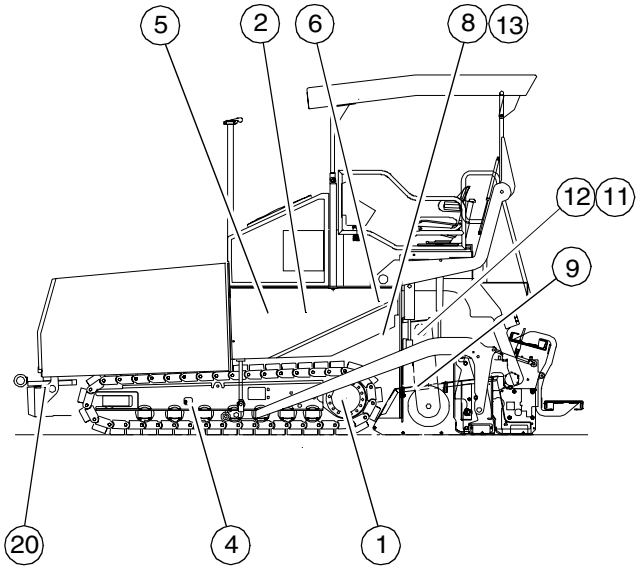

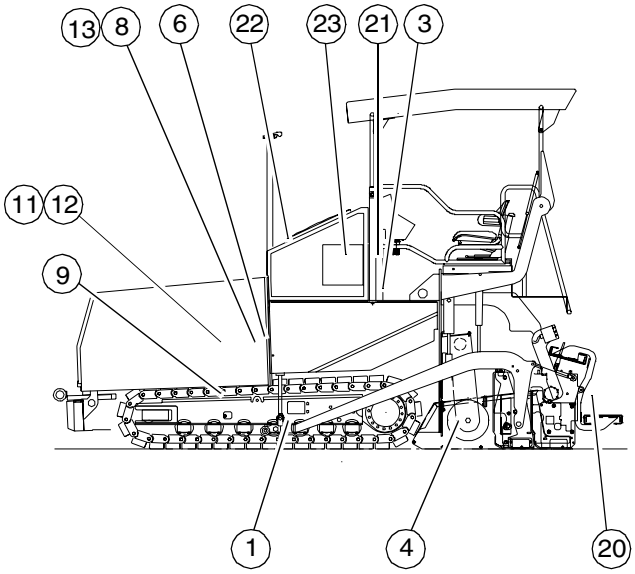

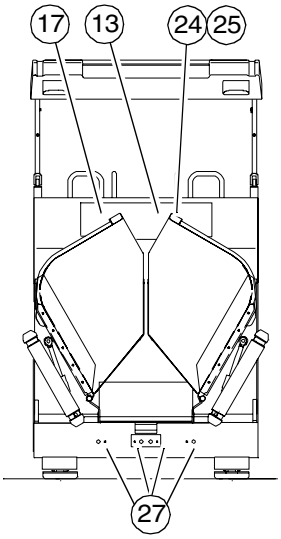

F F6C.GB 6-30 0504

2.3 Every 500 operating hours

Item	Maintenance point	Quantity	Lubrication	Check	(Oil) change	Operating material	Amount
11	Auger box (filling level)	1		x		Grease	see „Filling volumes“
17	Diesel engine: - Oil change - Filter change	1			x	Engine oil	see „Filling volumes“
	Engine mounts			x			

2.4 Annually (or every 1000 operating hours)

Item	Maintenance point	Quantity	Lubrication	Check	(Oil) change	Operating material	Amount
1	Planetary gear conveyor	2		x		Gear oil 220	see „Filling volumes“
5	Pump distributor gear (○)	1			x		
21	V-belt tension	1		x			
23	Fuel filter	1			x		
	Diesel engine: - Valve clearance - Glow plugs			x x			
	Have a specialist check the paver finisher, the screed and the gas heater system			x			
	Hoses and hose connections to the drive motor	Check, replace if necessary					

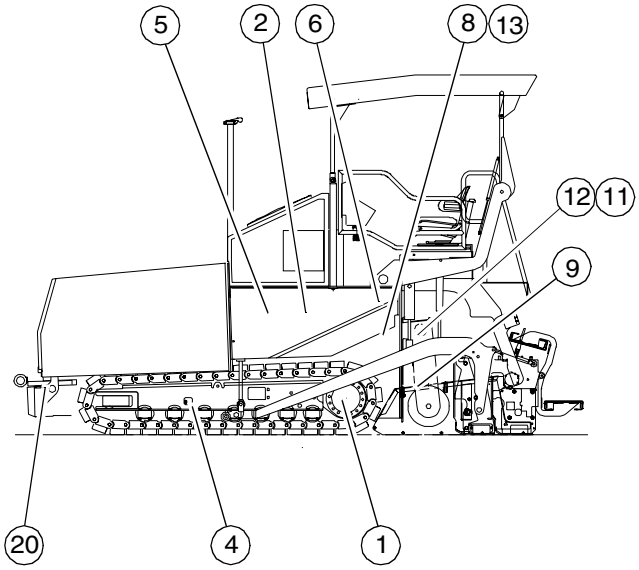

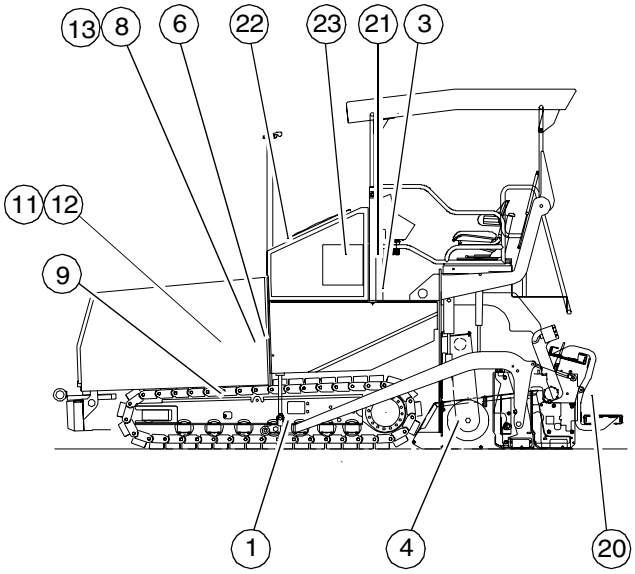

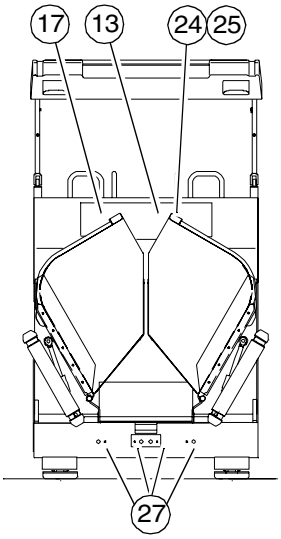

F F6C.GB 8-30 0504

2.5 Every 2 years (or every 2000 operating hours)

Item	Maintenance point	Quantity	Lubrication	Check	(Oil) change	Operating material	Amount
3	Air filter	1			x		
21	V-belt	1			x		
22	Fuel tank and system	1		x			
24	Hydraulic suction filter	1			x		
25	Hydraulic oil reservoir – entire filling	1			x	Hydraulic oil	see „Filling volumes“

3 Points for checking, lubricating and draining oil

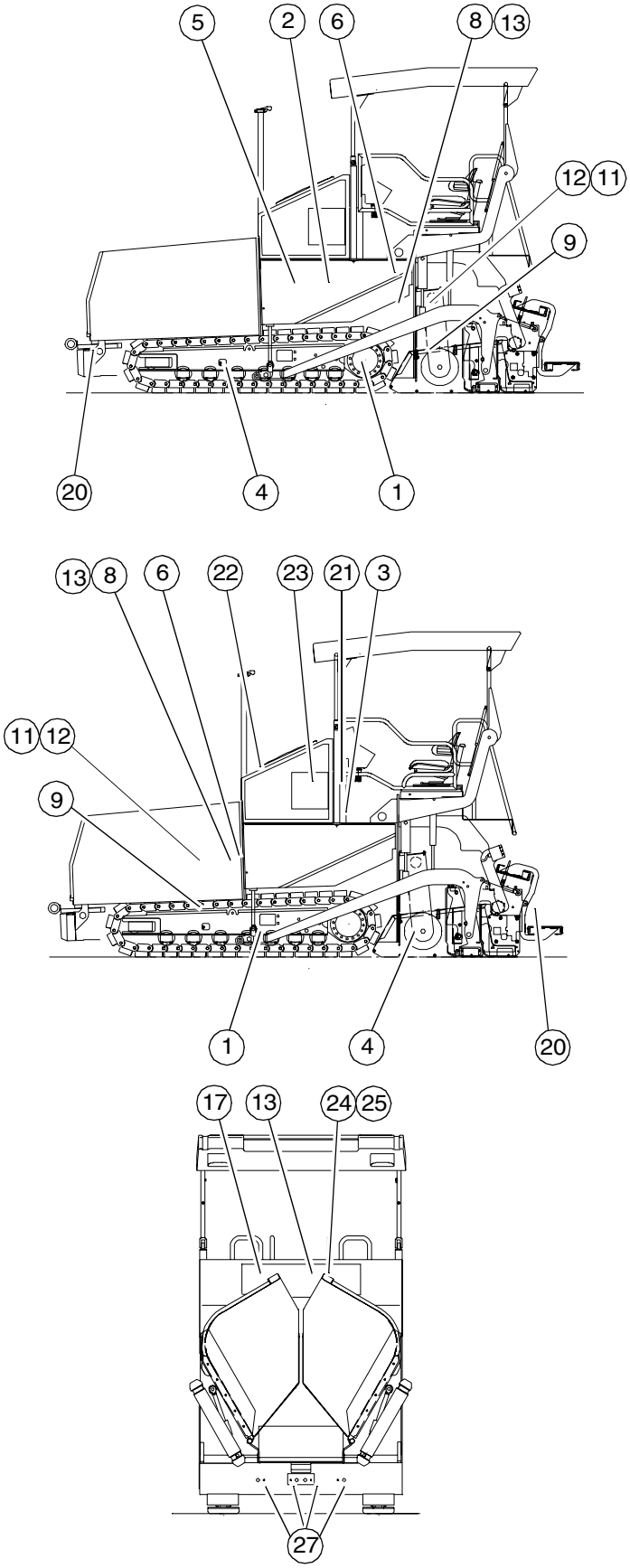

☞ The points for checking, lubricating and draining oil are described in detail below. The item numbers given in the headers refer to the illustration above.

3.1 Checkpoints

Planetary gear conveyor (1)

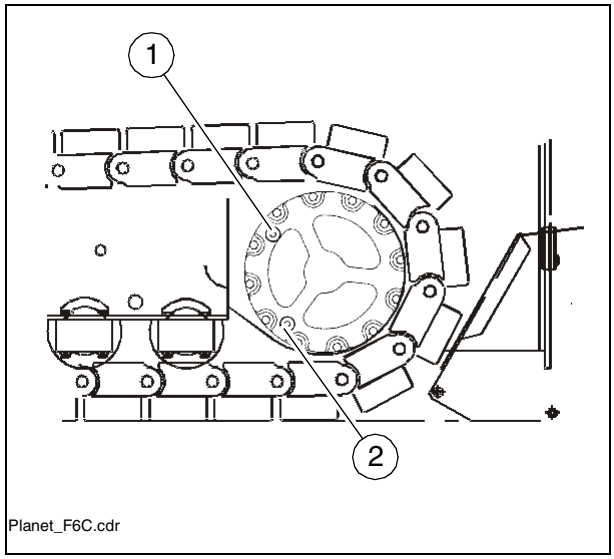

The check and filling screw (1) must be in its 10 o'clock position for the oil level check and for oil filling. To drain off the oil, the drain plug (2) must be in its 6 o'clock position.

- To **check the oil level,** unscrew check screw (1).

☞ With the correct oil level, the oil is just below the bottom edge of the check hole or only a small amount of oil discharges from the opening.

To **fill** oil:

- Unscrew filling screw (1).
- Pour prescribed oil into the filling hole at (1) until the oil is just below the bottom edge of the filling hole.
- Retighten filling screw (1).

Oil change

⚠ Only change the oil when the vehicle is at operating temperature, immediately after stopping the gearbox.
This ensures that solid particles are not deposited.

STOP Wear protective clothing when working with hot oil. Risk of health hazards if hot oil comes into contact with the skin.

- Unscrew oil drain plug (2),
  collect escaping oil.
- Unscrew filler plug (1) for venting purposes.
- Once the oil has all been drained out, screw drain plug (2) back in again correctly.
- Fill the new oil through the open filler plug until a small amount of oil exits from the screw plug bore.
- Screw filler plug (1) back in correctly.

STOP Collect used oil in a suitable container and dispose of correctly

⚠ Ensure a high level of cleanliness when filling oil.

⚠ First oil change after 150 operating hours!

⚠ Every month, check the gearbox's bolt connections and if necessary tighten to the tightening torques specified in the manufacturer's documentation.

Oil quality

⚠ An oil quality check must be carried out every six months.
Used or aged lubricating oil must be replaced immediately.

Batteries (2)

When supplied, the batteries are filled with the correct amount of acid. The acid level should reach the upper mark. If this is not the case, use only distilled water for topping up!
The poles must be free of oxide. Protect them with special pole grease.

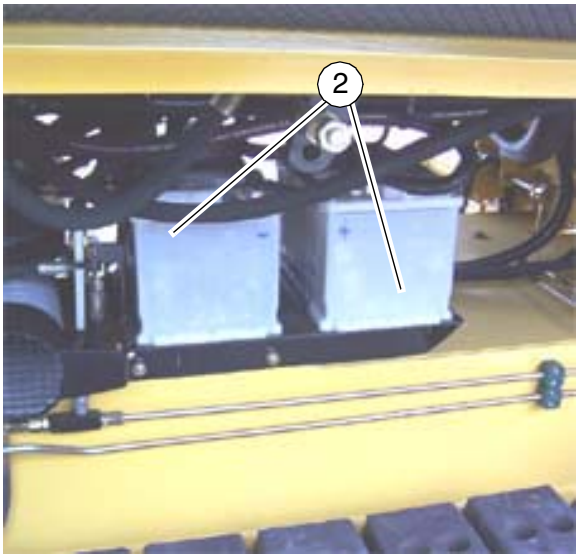

Batterei_F6C.jpg

Air filter (dry air filter) (3)

☞ For air filter maintenance, refer to Motor-Betriebsanleitung.

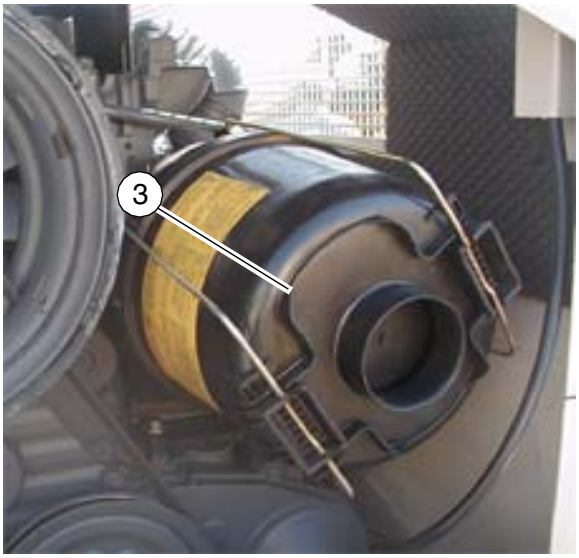

Lufi_F6.jpg

Track tension of caterpillar drive (4)

The track tensioner for the drive track is filled via the grease nipple (A) located on the side of the caterpillar drive:

Checking track tension:
Drive the finisher's caterpillar drive on a suitable block of wood (B) or similar object.
To relieve track tension, reverse slightly so that the machine is however still on the wooden block.

The track tension is correct when the chain sag between the middle roller and chain is 20-30 mm.

If necessary, use a grease gun to top up grease on chain tensioner (A).
Then move the machine a little forwards and backwards and check the sag again.

☞ Carry out this process on both caterpillar drives!

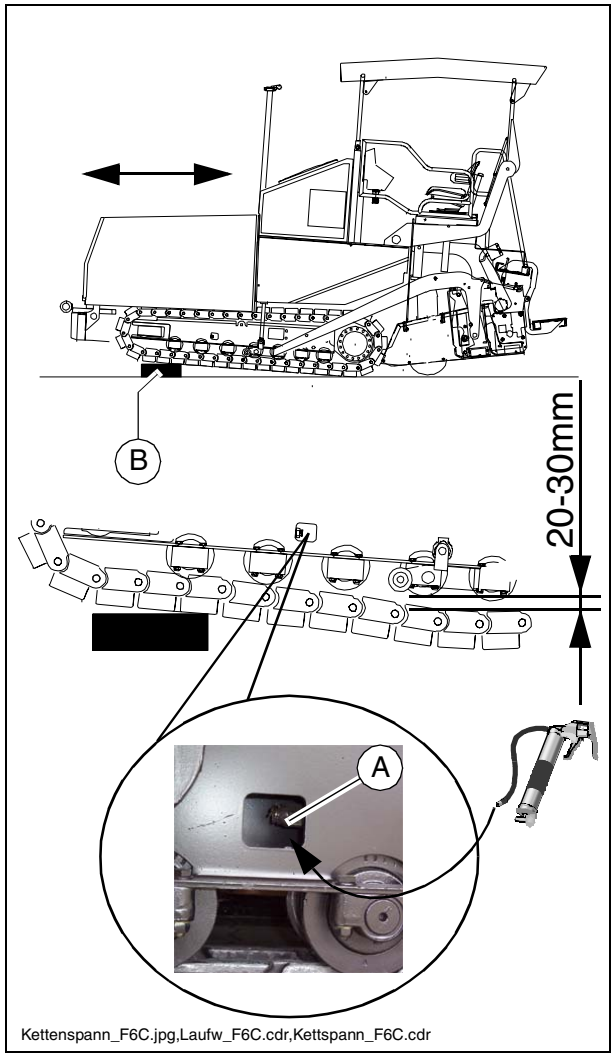

Pump distributor gear (5)

The screw plug (5.1) is simultaneously the filler aperture and oil level check.

- Unscrew the screw plug (5.1) and check the oil level with the dipstick connected to this.
- Top oil up if necessary, screw the screw plug in again properly.
  Ensure cleanliness!

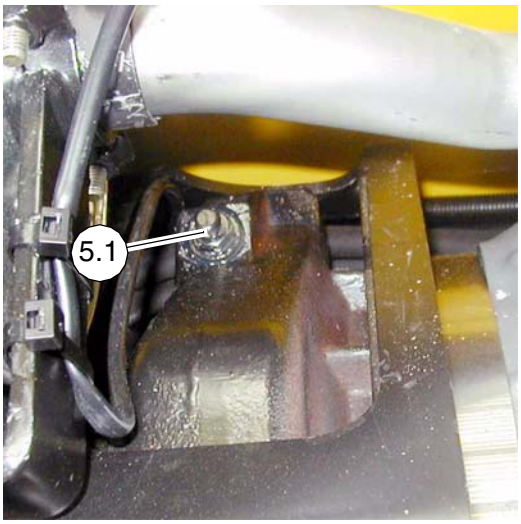

PVGCheck_F6.jpg

High-pressure hydraulic filter (6)

⚠ All hydraulic system filters must be checked and replaced where necessary 20 operating hours after repairs have been made!

Replace filter cartridges when maintenance indicator (6.1) turns red.

Drain the soiled oil that leaks out after unscrewing the filter cap into a used oil container.
Take out the filter cartridge and have it disposed of by specialists (danger of environmental pollution!). Wash out the housing, replace the O-rings and apply a thin layer of oil to them. Mount the filter housing with the filter cartridge again and tighten it properly. The red indicator will then be automatically reset.

Hochdruck_F6.jp

Conveyor drive chains (8)

☞ If the tension has been set properly, the chain must be able to move freely approx. 10 - 15 mm.

Slightly loosen the four fastening bolts (8.1) and the lock nuts (8.2) to re-tension the chains.
Use the tensioning screw (8.3) to set the required chain tension.
Re-tighten the fastening bolts and the lock nuts.

⚠ Only carry this work out when the engine is switched off!

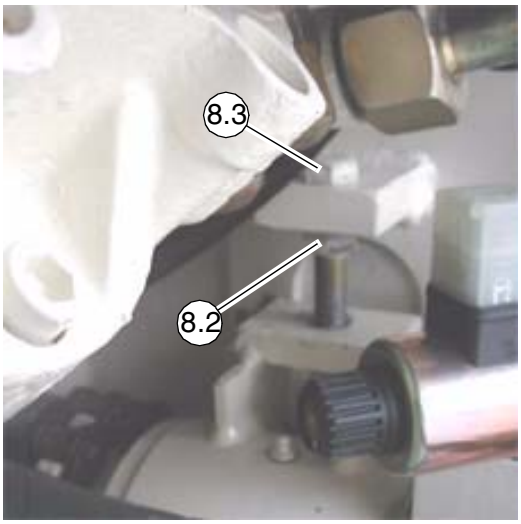

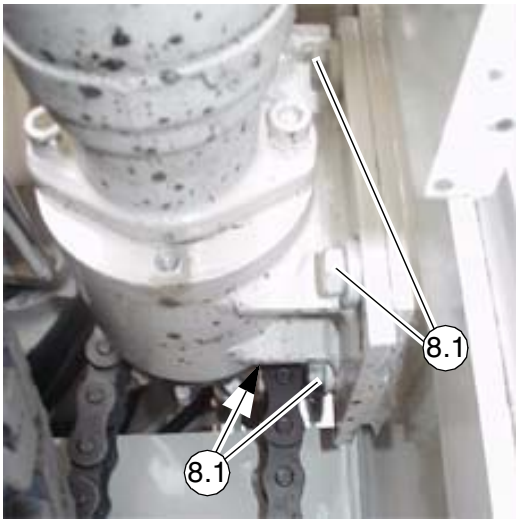

Lrostantrieb.jpg,Lrostantrieb2.jpg

Outer auger bearing (9)

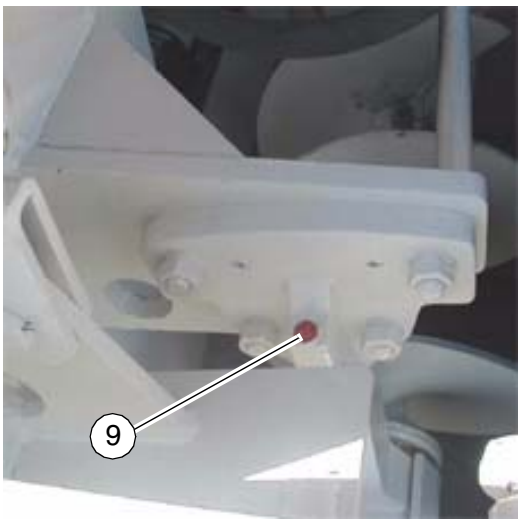

F0139_A1.TIF

The lubricating nipples are located on each side at the top of the outer auger bearings.
These nipples must be lubricated each time work is finished to force out any bitumen residues that might have entered and to supply the bearings with a fresh filling of grease.

Apply 6 squirts of grease using a grease gun.

☞ If the auger is extended, the outer rings should be loosened slightly when initially greasing the outer bearing points in order to improve ventilation on greasing.
The outer rings must be properly secured again after greasing.
New bearings must be filled with 60 squirts of grease using a grease gun.

Auger box filling level (11)

Only carry out maintenance work on the drive chains when the engine is switched off.

The auger box is equipped with a lifetime grease filling.

In order to **check the filling level**:

- Remove the nuts (11.1) and remove the closing cover (11.2).

The auger box should be filled with grease up to the top edge of the lower chain sprocket. (approx. 3.5 litres)

- If necessary, top grease up and seal the auger box again properly.

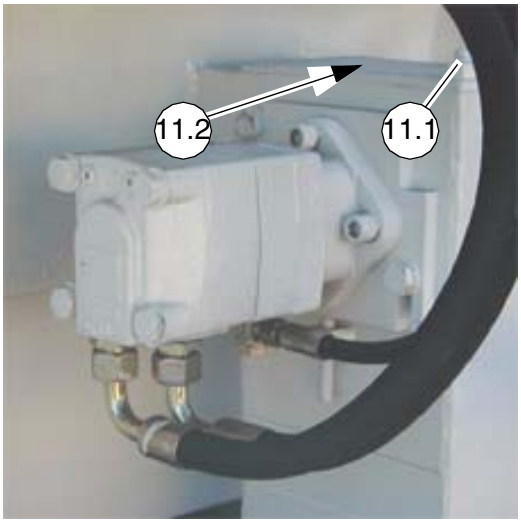

schneckantr.jpg

Auger drive chains (12)

Only carry out maintenance work on the drive chains when the engine is switched off.

To **check the chain tension**:

- Manually turn both augers to the right and left. In this case, movement clearance at the augers' outer circumference should be 13-15 mm.

To **re-tension** the chains

- Loosen fastening bolts (12.1)
- Set the chain tension correctly using the threaded pin (12.2):
  - Tighten the threaded pins to 20 Nm using a torque wrench.
  - Subsequently loosen the threaded pins again by one full revolution.
- Retighten the bolts (12.1).

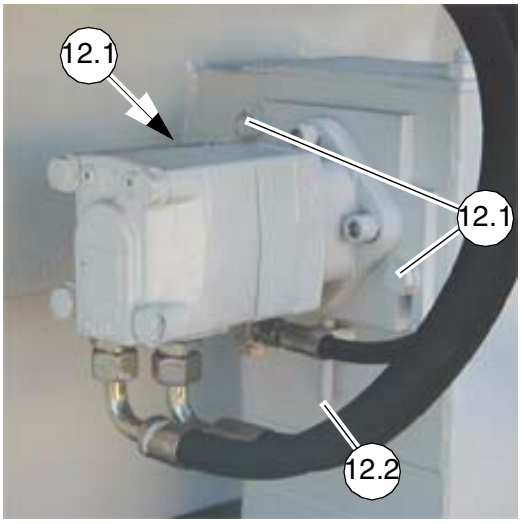

schneckantr.jpg

Conveyor drive (13)

A lubricating nipple is positioned on the left and right sides of the conveyor drive housing.

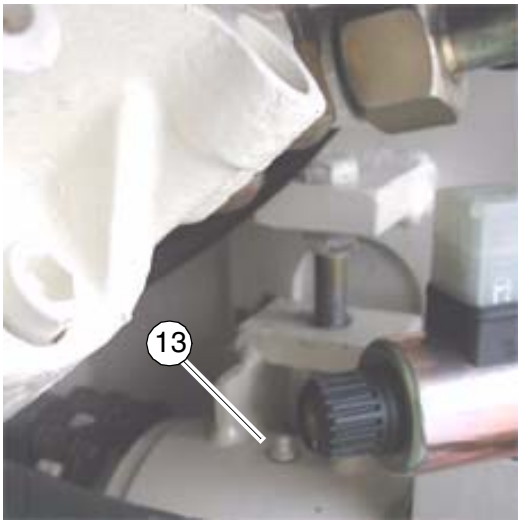

Lrostantrieb.jpg

Diesel engine (17)

The engine oil level should be checked with the dipstick (17.1) each time before starting work.
Only check the oil level when the engine is in a horizontal position!

⚠ An excessive oil level destroys the gaskets in the engine; insufficient oil causes the engine to overheat and destroys it.

Refer to the engine operating instructions for oil and filter changes, fuel system ventilation and valve play adjustment

Motoröl_F6.jpg

Check valve play and glow plugs

⚠ Check the engine's valve play and glow plugs after every 1000 hours of operation and adjust or replace if necessary.

☞ To check and adjust valve play and to check the glow plugs:
see engine operating instructions

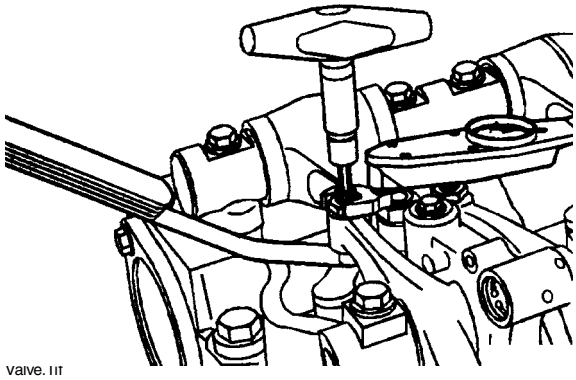
valve.tif

Conveyor deflection rollers (20)

The deflection rollers for the conveyors are lubricated with lubricating nipples (20.1) located behind the crossbeam.
The centre bearings are lubricated via the outer lubricating nipples.

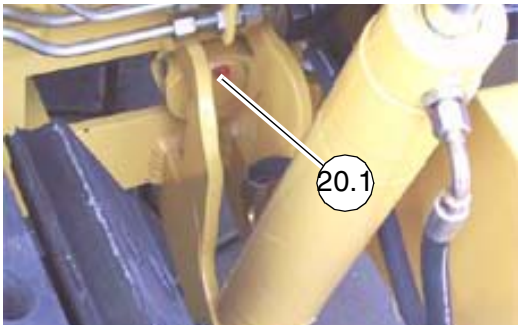

Lrostumlenk_F6C.jpg

V-belts (21)

When checking the V-belts, it must be possible to push them inwards by max. 1–1.5 cm.
If this is not the case, tighten the V-belts (see Motor-Betriebsanleitung).

Riemen_F6.jpg

Fuel tank (22)

We recommend always topping up the fuel tank before starting work to prevent the tank from „running dry“, as this would necessitate ventilation of the entire fuel system.

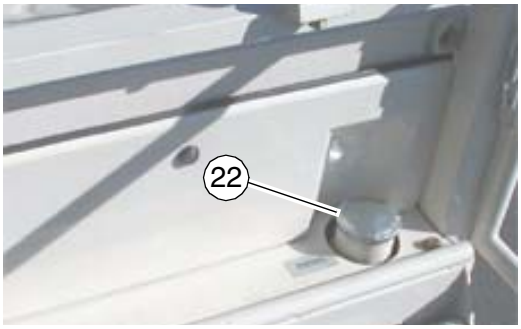

Kraftstoff_F6.jpg

Fuel filter (23)

The system comprises a prefilter (23.1) and a main filter (23.2).

☞ Refer to engine operating instructions for maintenance

Vorfilt.TIF

Hydraulic suction filter (24)

The filter must be replaced when the maintenance indicator (24.1) reaches the red mark.
The filters are also replaced when changing the hydraulic oil.

Unscrew the lid of the filter housing on the hydraulic oil reservoir and replace the filter cartridge.

⚠ Never clean and reuse old filters! Always use a new filter cartridge.

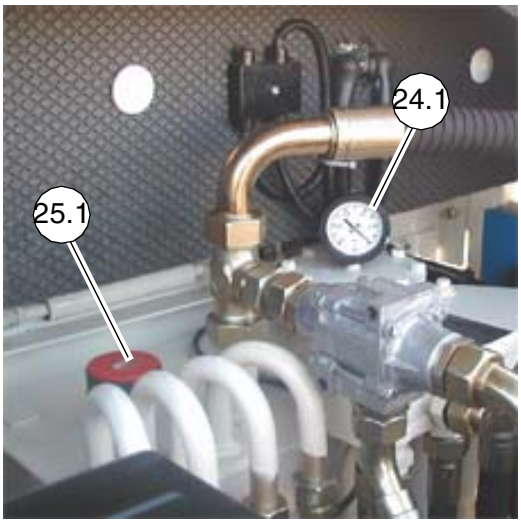

Hydraulik_F6.jpg

Hydraulic oil reservoir (25)

Use dipstick (25.1) to check the oil level.
With retracted cylinders, the oil level must reach the upper notch.
Dust and dirt must be removed from the oil reservoir vent on a regular basis. Clean the oil cooler surfaces (also see Motor-Betriebsanleitung).

⚠ Use only recommended hydraulic oils (see the section „Recommended hydraulic oils“).

Chain tension, conveyor (27)

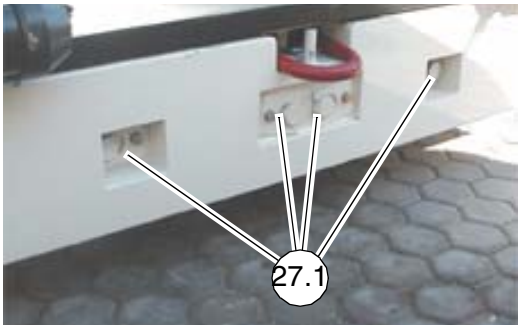

Lrostspann_F6.jpg

The adjusting screws (27.1) are located at the front of the crossbeam.

The conveyor chain tension should not be too taut or too slack. An excessively taut chain can cause the chain to be stopped or to break when material falls into the space between the chain and the sprocket.
An excessively slack chain may catch on protruding objects and be destroyed.

☞ For the daily visual inspection, peer horizontally below the bumper. The chain must not hang below the bottom edge of the bumper.
If the chain has to be adjusted, measure the distance between the lower edge of the bottom plate and the bottom edge of the chain when the chain is relieved (see Figure).

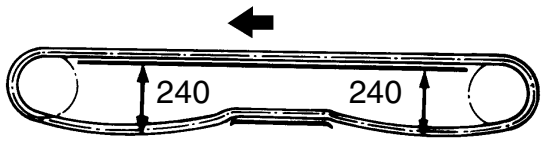

F0159_A1.TIF

General visual inspection

The daily routine should include visual inspection of the entire paver finisher, incorporating the following checks:

- Are components or control elements damaged?
- Are the engine, the hydraulics, the gearbox, etc. leaking?
- Are all fastening points (conveyor, auger, screed, etc.) in order?

⚠ Immediately eradicate any defects in order to avoid damage, potential accidents and environmental pollution!

Check by a specialist

☞ Have finisher, screed and optional gas or electric system checked by a trained specialist.

- as required (according to the operating conditions and the nature of application),
- but at least once a year, to ensure that they are safe to operate.

3.2 Oil drain points

Collect all used oil and have it disposed of properly! Risk of environmental pollution!

For the filling volumes, see „Filling volumes“.

Pump distribution gear (5)

The drainage point for the pump distributor gear is located behind the left side flap.

Drain the oil:

- Hold the end of the hose (5.1) above a used oil container.
- Unscrew the protective cap (5.2).

Allow the oil to drain completely and reinstall the protective cap properly.

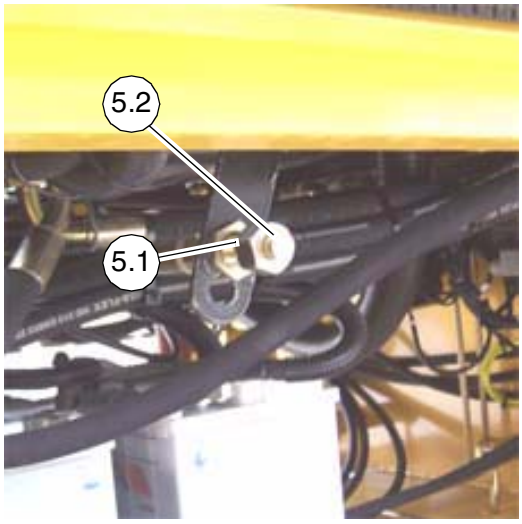

PVGAblass_F6C.jpg

Diesel engine (17)

The drainage point for the engine oil is located behind the right side flap.

Drain the engine oil:

- Unscrew the protective cap (17.1).
- Route the hose end into a used oil container.
- Open the shut-off valve (17.2) with a wrench and allow the oil to drain completely.

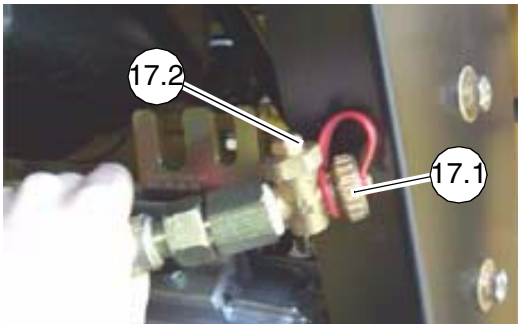

Ölablass_F6.jpg

Replacing the engine oil filter:

- The filter (17.3) is located directly on the engine block on the left-hand side. It can be accessed by opening the engine hood.

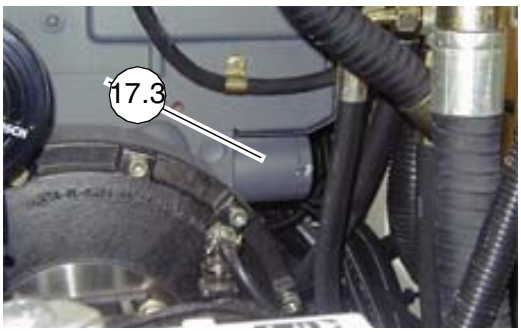

Ölfi_F6.jpg

Drive motor – oil filter cartridge

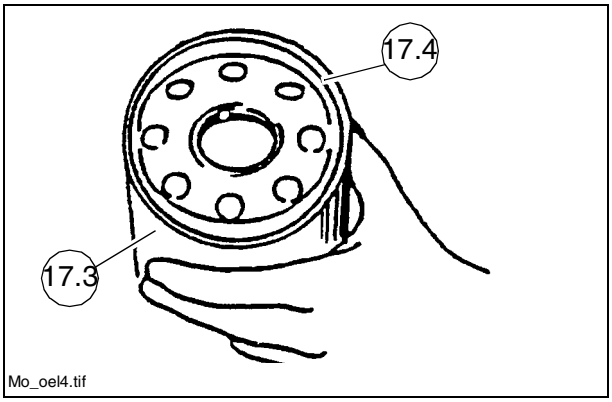

☞ When changing the oil, the new cartridge is inserted after the used oil has been drained.

- Loosen the filter cartridge (17.3) with a filter wrench or a screwdriver and unscrew manually.
- Lightly oil the rubber gasket (17.4) for the new lubricating oil filter cartridge and screw in manually until the gasket is flush.
- Tighten the cartridge by turning it one further half revolution.

☞ After installing the oil filter, attention must be paid to the oil pressure display and good sealing during the test run.

Fuel tank (22)

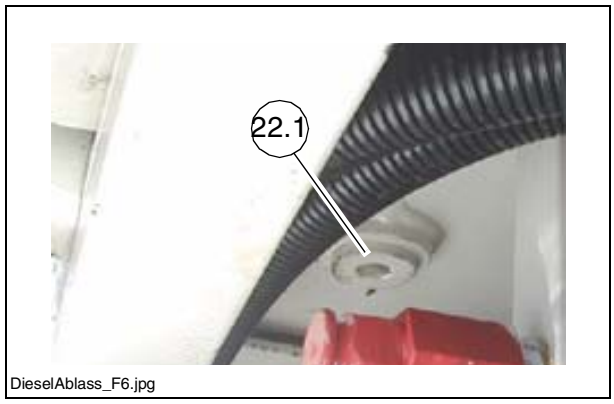

In order to drain water and sediment:

- Position a collecting vessel.
- Unscrew the drain plug (22.1) on the bottom of the tank.
- Drain approx. 1 l fuel into the collecting vessel.
- After draining, screw the screw in again, using a new gasket.

⚠ Dispose of collected fuel according to the national regulations.

Hydraulic oil reservoir (25)

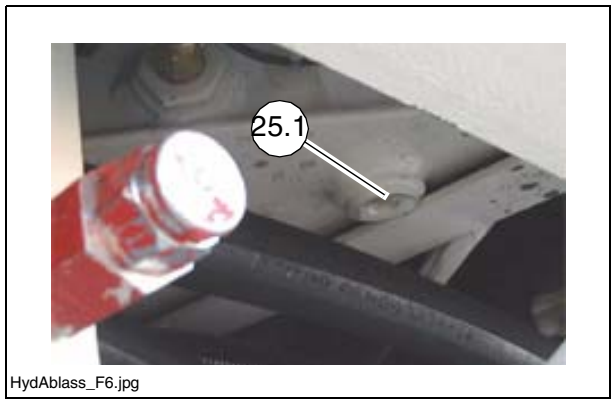

To drain the hydraulic oil, the drain plug (25.1) must be unscrewed and the oil must be collected in a container with the aid of a funnel.
After draining, screw the screw in again, using a new gasket.

4 Lubricating agents and operating materials

Use only the lubricants listed below or well-known brands of the same quality.

Use only clean containers (inside and outside) for pouring oil or fuel in.

☞ Note the filling volumes (see the section „Filling volumes“).

⚠ Incorrect oil or lubricant levels promote rapid wear and cause the paver finisher to fail.

	Aral	BP	Esso	Total Fina (Total)	Mobil	Shell	Wisura
Grease		BP Multi-purpose grease L2	ESSO Multi-purpose grease	Total Multis EP 2	Mobilux 2 Mobiplex 47	SHELL Alvania Grease EP (LF) 2	Retinax A
Hot bearing grease		Unirex S2				Aeroshell Grea-se 22	
High-temperature grease (auger)			Norva HT2 Svedala Demag order No. 956.90.10.05				
Engine oil		See Motor-Betriebsanleitung. Shell Rimula Super FE10 W 40 has been filled in at the factory.					
Hydraulic oil		See section 4.1 Shell Tellus Oil has been filled in at the factory.					
Gear oil 90		BP Multi EP SAE 90	ESSO SAE 80W90	Total EP 90	MOBIL GX 90	SHELL Spirax G 80 W - 90	
		ESSO SAE 80W90 has been filled in at the factory.					
Gear oil 220	Aral Degol BG220	BP Energol GR-XP 220	ESSO Spartan EP 220	Total Carter EP 220	MOBIL Mobil-gear SHC 220	SHELL Omala 220	Optimol Optigear 220
		Aral Degol BG220 has been filled in at the factory.					
Diesel fuel							

4.1 Hydraulic oil

Preferred hydraulic oils:

a) Synthetic hydraulic fluid based on esters, HEES (○)

Manufacturer	ISO viscosity class VG 46
Shell	Naturelle HF-E46
Panolin	HLP SYNTH 46
Esso	HE 46

b) Mineral oil pressure fluids

Manufacturer	ISO viscosity class VG 46
Shell	Tellus Oil 46

⚠ When switching from mineral oil pressure fluids to biodegradable pressure fluids, please contact our factory advisors!

☞ Use only clean containers (inside and outside) for pouring oil or fuel in.

4.2 Filling volumes

	Operating material	Amount	
Fuel tank	Diesel fuel	70 18,5 15,4	Litre US-Gal. Engl. Gal.
Hydraulic oil reservoir	Hydraulic oil	60 15,86 13,2	Litre US-Gal. Engl. Gal.
Diesel engine (with oil filter change)	Engine oil	10,5 2,78 2,31	Litre US-Gal. Engl. Gal.
Planetary gear conveyor	Gear oil 220	2,6 0,68 0,57	Litre US-Gal. Engl. Gal.
Cooling system	Coolant	3,5 0,93 0,77	Litre US-Gal. Engl. Gal.
Auger box	Liquid grease	1,7 0,45 0,37	Litre US-Gal. Engl. Gal.
Pump distribution gear	Gear oil 90	70 18,5 15,4	Litre US-Gal. Engl. Gal.

☞ For the different types of operating materials, see „Lubricants and operating materials“ ,page 25.

5 Electric Fuses

5.1 Main fuses (1)

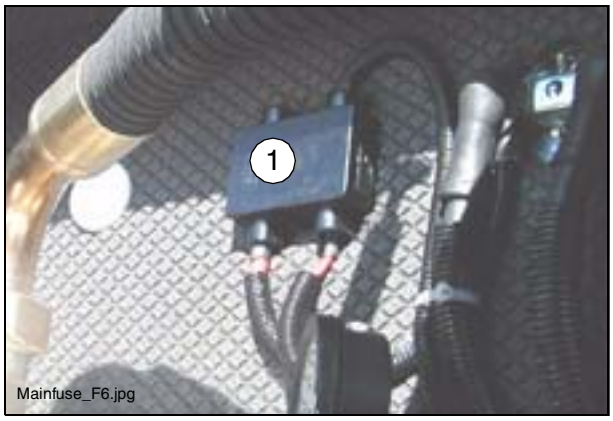

1.	- F3.1 Terminal box, overall electrics - F3.2 not in use	50 A

5.2 Fuses in the main terminal box

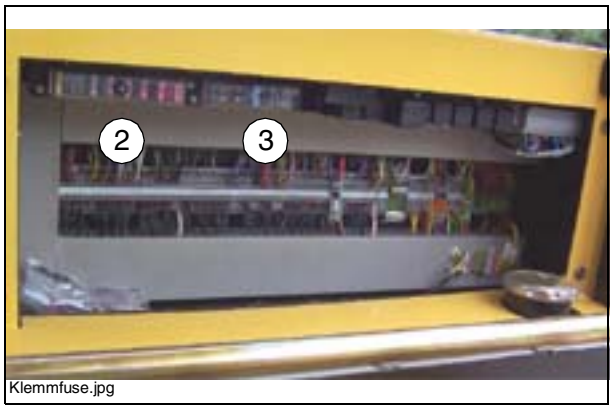

Fuse board (2)

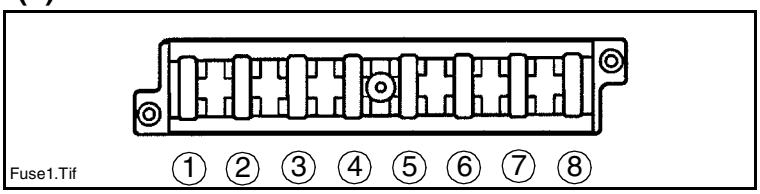

No.	F5.1 - F5.8	A
1.	Hydraulic oil cooler fan	20
2.	free	10
3.	Screed heater prefuse	10
4.	Starter	10
5.	1. Rear left socket	10
6.	2. Rear left socket, rotating beacon (○)	10
7.	1. Rear right socket	10
8.	2. Rear right socket	10

Fuse board (3)

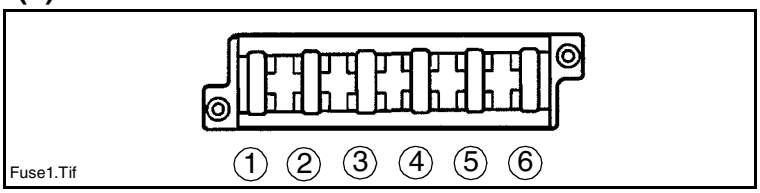

Nr.	F5.9 - F5.14	A
1.	free	
2.	free	
3.	free	
4.	Main fuse for traction drive	15
5.	Sensors / diagnosis for traction drive	1
6.	Control fuse for traction drive	1

5.3 Fuses on operating panel

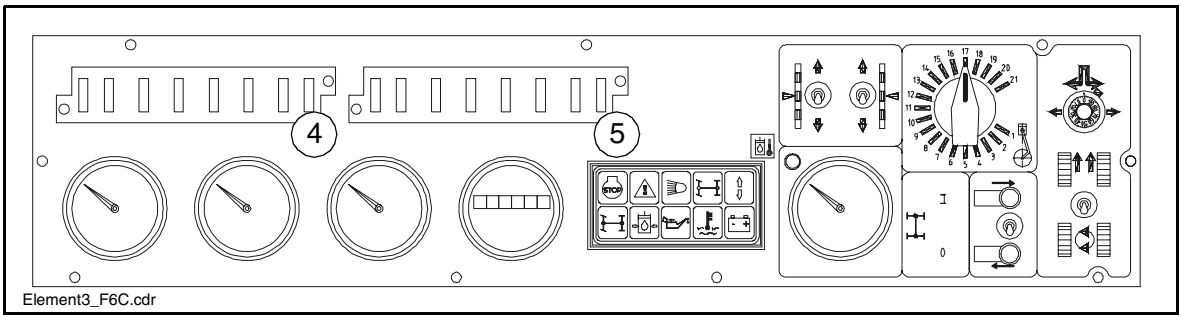

Fuse board (4)

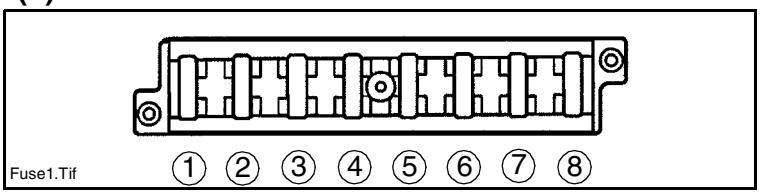

No.	F1.1 - F1.8	A
1.	Activation lock, emergency stop button,	5
2.	Indicator lamps; torn V-belt; indicators	3
3.	Levelling system (slope/grade control), raise and lower screed	5
4.	Right conveyor / auger	7.5
5.	Left conveyor / auger	7.5
6.	Tamper / vibration	3
7.	Hopper hydraulics, screed hazard warning system, levelling system remote control, auger crossbeam height adjustment (○), extend / retract screed	7.5
8.	Diesel engine stop solenoid	7.5

Fuse board (5)

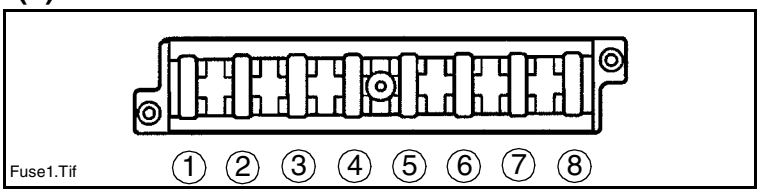

No.	F2.1 - F2.8	A
1.	free	5
2.	Horn	5
3.	Option	5
4.	free	7.5
5.	Front working lights	5
6.	Instrument illumination, front working lights	5
7.	free	5
8.	free	5